Bearings

Miniature Precision Ball Bearings

NMB™

NMB Technologies Corporation

NMB Technologies Corporation is a subsidiary of NMB (USA) Inc., the North American headquarters and operating center of the Minebea Group of Companies.

Minebea Co., Ltd., was established in 1951 as Japan's first specialized manufacturer of miniature ball bearings. Today, the Company is the world's leading comprehensive manufacturer of miniature ball bearings and high precision components, supplying customers worldwide in the information and telecommunications equipment industry, as well as automotive, medical, aerospace, industrial and household electrical appliance industry.

The Minebea Group consists of 49 subsidiaries and affiliates in 14 countries, including Japan, Thailand, Cambodia, Singapore and China, as well as several others in Europe and the Americas. The Group maintains 29 plants, R&D facilities and 44 sales offices, and employs over 54,000 people worldwide.

NMB's miniature and small ball bearings are manufactured in Thailand and Singapore, and range in size from .1181 to 1.000 inch, outside diameter, providing high performance within a small envelope design.

NMB Technologies Corporation's domestic headquarters are located in Chatsworth, California. Highly trained application engineers, experienced product managers and customer service representatives work closely with customers to develop the most cost effective solution for today's challenging applications. Pre-design and after-delivery follow up assure complete customer satisfaction.

Contact NMB Technologies Corporation today. Visit our web site at www.nmbtc.com or call our Bearing Support Group directly at 818-341-3355.

NMB™

Table of Contents

Activities of Minebea

Quality Assurance System

Minebea produces the same level of high quality products at all of our factories located world wide. All of the product departments have acquired and maintained registration to ISO9000 and ISO/TS16949 international standards of quality. At major production sites in Thailand, Singapore, and China, R&D centers have been founded for the purpose of performing various analyses, and improving quality levels at each production site.

Environmental Activities

A most important theme upheld by the whole Minebea group is environmental protection. Since 1993, environmental protection activities have been accomplished with "environment vision" being established as a fundamental policy. The Minebea group has acquired registration to international environmental management standard ISO14001. From the design development phase to the production and shipment phase, Minebea makes every effort to produce products which meet goals such as "No harmful substances for environment, health, and safety," "less energy consumption," and "3R reduced, reused, and recycled."

Minebea does not just follow every environmental regulation. We also protect the environments of the communities where our offices are located. In addition to regular environmental checkups at each factory and office, employees are educated to maintain clean environments at both their workplace and home.

Warnings and Precautions

Ball bearings are precise components that require careful handling. Without understanding the performance and application conditions of the ball bearing, optimum performance can not be achieved. Improper usage could lead to malfunctioning and/or failure. Please adhere to the warnings that follow.

Warnings

- NMB is not responsible for damage to products caused by installed ball bearings that were used in unforeseeable ways.
- NMB is not responsible for damage to ball bearings and/or products caused by installed ball bearings if modified in any way.
- NMB is not responsible for any damage caused by installed ball bearings if the application conditions and/or equipment specifications are changed after determining the specification.
- The products described in this catalog are not meant to be used for nuclear power related equipment. NMB is not responsible for damage to products caused by ball bearings if used for nuclear power related applications.

Precautions

Selecting a Ball Bearing

Please contact NMB if any of the conditions described below apply to your application.

- If ball bearings are used under extreme conditions (i.e. high speed, high and/or low temperatures, high and low humidity, and high loads).
- If the application requires high precision.
- If ball bearings are utilized as the critical security parts of the following applications: aircraft, aerospace related equipment, public services (i.e. electricity and gas), automotive, shipping equipment, parking structure devices, elevating devices, medical equipment, and toys.
- If mating parts contain plastics, these may be degraded and/or damaged from interaction with certain oils and/or greases.
- If electrical current passes through ball bearings.
- If the ball bearing is used in a potentially corrosive environment (i.e. exposure to gas, vapor, and/or liquid).

Storing Ball Bearings

To avoid potential issues with ball bearings during storage (i.e. contamination, rust, and/or grease degradation), please adhere to the following directions:

- Avoid high temperature and high humidity environments.
- Avoid placing the product packages directly on the floor and utilize pallets during storage.
- Unpack the product package in clean areas and do not leave the ball bearings unprotected.
- Avoid contact with dirty cloths, which could possibly transfer contamination particles.
- Avoid handling the ball bearings with bare hands.
- Avoid placing ball bearings in corrosive conditions (gas, vapor, and liquid).
- Avoid placing ball bearings near magnets or magnetized metals.

During Installation into Equipment

Careful handling is required during bearing installation. Impacts and high loads can produce dents and damage within the bearings that will degrade performance and reduce bearing life.

- Please do not drop the ball bearings.
- Please do not use tools like hammers which can produce impact loads.
- Excessive loads must not be applied.
- Please keep the installation environment clean.
- Please use designated installation tools and fixtures, and keep them clean.
- Please keep the parts near shafts or housings clean.
- Please do not touch the bearings directly with bare hands. Use dust free gloves or finger cots.

Storing and Shipping of Equipment

If vibration is applied to equipment using ball bearings, fretting could occur inside the ball bearings. This eventually causes bearing noise and early end of life. If impact loads are applied, damage and dents generated inside the bearing could cause degradation and early end of life.

- Equipment assembled with ball bearings should be packed by shock absorbing methods to avoid damage from impact loads. If the equipment has rotational parts like impellers, they should not be allowed to rotate inside the packing boxes.
- During shipping, no vibration or shock should be applied to the equipment.

Operation Test of Ball Bearings

- After installing ball bearings, we recommend performing an operation test to confirm no abnormal phenomena have occurred. During the test, the rotation speed should be raised gradually.
- If any abnormalities are found, the operation test should be terminated and the source should be investigated. Please do not use bearings if they are suspect or damaged.

Other

- Please confirm the types of lubricants at the time of purchase. Some sealed and shielded bearings in the market use only oil lubrication.
- In "the foreign exchange and foreign trade law," some ball bearing components are considered as foreign goods under export control. Export approval from the Japanese minister of economy is required to export the foreign goods defined in the law.

Bearing Types

Minebea's main ball bearing product is the single row radial deep groove ball bearing. Deep groove radial ball bearings with shields or seals are available to provide protection from contamination and grease leakage. Flange type and snap ring type bearings are available for improved housing fits. NMB also produces ultra thin type radial ball bearings, thrust ball bearings, and bearings.

Radial Deep Groove Ball Bearings (R-, L-, RI-)

Characteristics:
This is the most common type of radial ball bearing. This type of ball bearing can support both radial and axial loads.

Types:
Open, shielded, and sealed
Metric and Inch series

Radial Deep Groove Ball Bearings with Outer Snap Ring (RNR-, LNR-)

Characteristics:
This is a radial ball bearing with an external retaining ring featured on one side of the outer ring surface. This design assists with axial positioning of the bearing in a housing.

Types:
Open and shielded
*High carbon chromium steel is the standard material

Flanged Radial Deep Groove Ball Bearings (RF-, LF-, RIF-)

Characteristics:
This is a radial ball bearing with a flange featured on one side of the outer ring surface. It assists with axial positioning of the bearing in a housing.

Types:
Open, shielded, and sealed
Metric and Inch series

Ultra Thin Radial Ball Bearings (A-)

Characteristics:
The bore relative to the outer diameter is larger than those of standard radial ball bearings.

Types:
Open and shielded
*Stainless steel is the standard material

Bearing Types *(continued)*

Thrust Ball Bearings (T-)

Characteristics:
A thrust ball bearing bears axial loads, but not radial loads.

Types:
With or without raceway grooves.
*Stainless Steel is the standard material.

Names and Symbols

A ball bearing is composed of an outer and inner ring, balls and a retainer. It is also available with shields, seals, flanges, and snap rings.

Ball Bearing Components

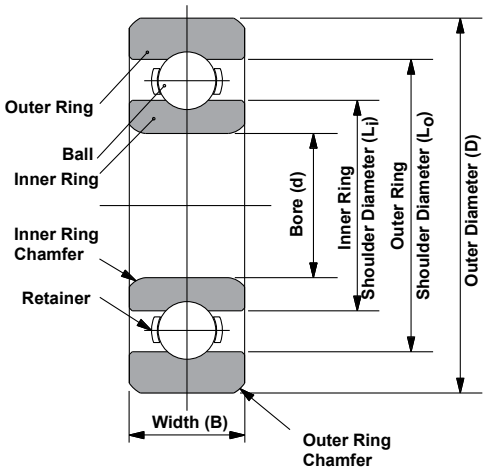

Standard

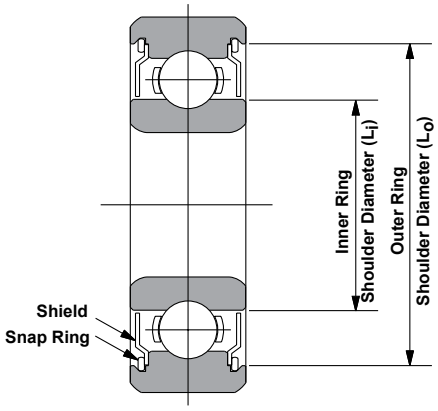

Shield Type

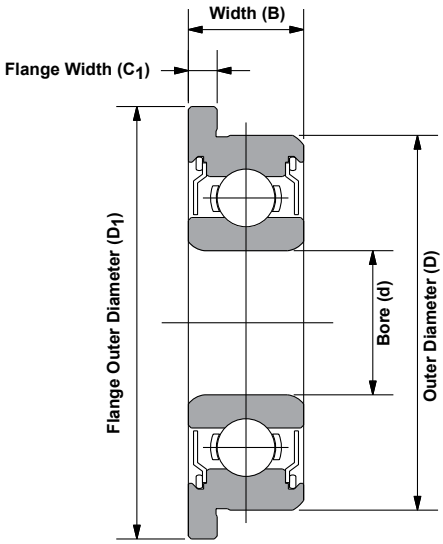

Flange Type

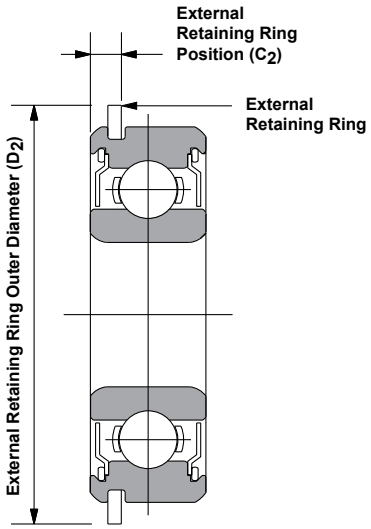

External Retaining Ring Type

Part Numbering System

The NMB Part Numbering System is comprised of the base part number and specification. The NMB Part Numbering system is unique to Minebea. JIS Part Numbering is based on a system that is defined in the JIS 1513 standard.

NMB Part Number

Base Part Number		
Ring & Ball Material	**Series**	**Size**
Details: Page 15	-	-
DD	**R-**	**1560**
No Code — SAE52100 or Equivalent Bearing Steel DD — Martensitic Stainless Steel CE — Outer/Inner Ring: SAE52100 or Equivalent Bearing Steel Ball: Ceramic	**Metric Radial Ball Bearing:** R-(RF-) — R-Series (Flanged) L-(LF-) — L-Series (Flanged) A- — Ultra Thin Type RNR- — R-Series with External Retaining Ring LNR- — L-Series with External Retaining Ring **Inch Radial Ball Bearing:** RI- — Inch Type (R-) — Used for particular Inch Types RIF- — Inch Flanged Type **Thrust Ball Bearing:** T- **Special Type:** ZB- — Integrated Shaft Bearing AS- — Special Type	Derived from the outside and bore diameters. Ex: Metric Size 1560 — OD 15mm, Bore 6mm Ex: Inch Size 418 — OD 4/16 inch, Bore 1/8 inch X — If the bearing design is different from basic, this comes after basic symbols. Ex: 1560X2 OD = 15 mm Bore = 6 mm Internal Design = X2 Type

Base Part Number		
Enclosure	**Noise Grade/Special Feature**	**Retainer**
Details: Page 16	-	Details: Page 17
ZZ	**MT**	**R**
No Code — Open Z — Metallic Shield (Fitted with Snap-Ring) H — Metallic Shield (Pressed) K — Metallic Shield (Staked) D — Rubber Seal (Contact) S — Rubber Seal (Non-Contact) Note: Double symbol indicates enclosures on both sides (e.g. ZZ, DD).	No Code — Standard MT — Electric motor quality (For extremely noise sensitive applications) SD — Special Design W — Wider width than standard Y — Narrower width than standard EE — Extended Inner Ring	R — Ribbon Retainer (Steel) H — Crown Retainer (Steel) MN — Plastic Retainer (Glass Fiber reinforced) Note: Other materials are also available for the plastic retainer.

NMB Part Number (continued)

Bearing Specification			
ABEC Grade	**Radial Play**	**Lubricant**	**Grease Fill Amount**
Details: Page 21	Details: Page 28	Details: Page 40	Details: Page 40
A1	**P25**	**LY121**	**L**
A1 ABEC grade 1 A3 ABEC grade 3 A5 ABEC grade 5 A7 ABEC grade 7	P13 .0001"~.0003" (2.5µm~ 7.5µm) P24 .0002"~.0004" (5.0µm~ 10.0µm) P25 .0002"~.0005" (5.0µm~ 12.5µm) P58 .0005"~.0008" (12.5µm~ 20.5µm) Note: Letter "P" followed by two to four numbers indicates the radial play range in ten thousandths of an inch. Ex: P25 indicates radial play of .0002" to .0005" (5.0µm to 12.5µm).	LO Oil LG Grease LY Grease or Oil LD No Lubrication	No Code Standard (25% ~ 35%) X 5% ~ 10% L 10% ~ 15% T 15% ~ 20% H 40% ~ 50% J 50% ~ 60% Note 1: Precentage of the void space within the assembled bearing that is filled with grease. Note 2: Some miniature ball bearings need amount adjustment.

NMB Part Number (Example #1)

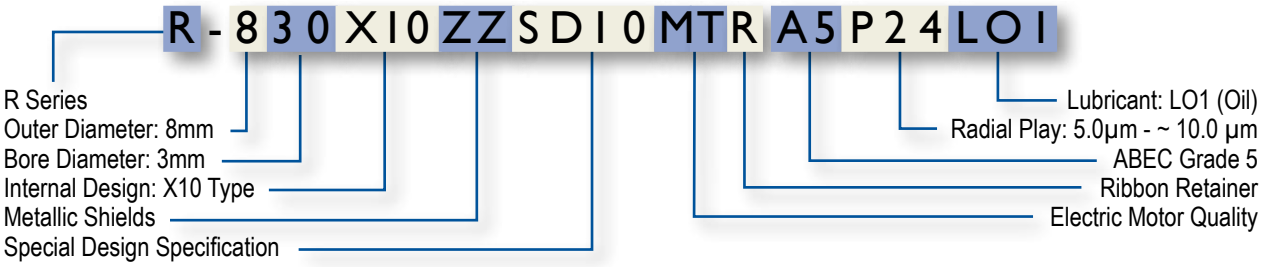

NMB Part Number (Example #2)

JIS Part Number

Base Part Number		
Ring & Ball Material	**Series**	**Bore**
Details: Page 15	-	_
	60	**8**
No Code SAE52100 or Equivalent Bearing Steel CE Outer/Inner Ring: SUJ2 or Equivalent Bearing Steel Ball: Ceramic	67 68 69 60 62 63 64 Single Row Deep Groove Ball Bearing	5 Bore: 5mm 6 Bore: 6mm : 00 Bore: 10mm 01 Bore: 12mm

Base Part Number		
Retainer	**Enclosure**	**Special Feature**
Details: Page 17	Details: Page 16	-
No Code	**ZZ**	**NR**
No Code Ribbon Retainer MN Plastic Retainer (Glass Fiber Reinforced) Note: Other materials are also available for the plastic retainer.	No Code Open Z Shield S Rubber Seal (Non-Contact) D Rubber Seal (Contact) Note: Double symbol indicates enclosures on both sides (e.g. ZZ, DD).	SD Special Design Spec. NR External Retaining Ring Type

Bearing Specification				
Radial Play	**Noise Grade**	**ABEC Grade**	**Lubricant**	**Grease Fill Amount**
Details: Page 28	-	Details: Page 21	Details: Page 40	Details: Page 40
M3	**MT**	**A1**	**LY121**	**L**
M2 3μm ~ 8μm M3 5μm ~ 10μm M4 8μm ~ 13μm M5 13μm ~ 20μm	MT Electric Motor quality (For extremely noise sensitive applications) SM Standard No Code Standard	A1 ABEC grade 1 A3 ABEC grade 3 A5 ABEC grade 5 A7 ABEC grade 7	LO Oil LG Grease LY Grease or Oil LD No Lubrication	No Code Standard (25% ~ 35%) X 5% ~ 10% L 10% ~ 15% T 15% ~ 20% H 40% ~ 50% J 50% ~ 60% Note: Percentage of the void space within the assembled bearing that is filled with grease.

608X10MNZZM5MTA1LY121H

- Bearing Series
- Bore Diameter: 8mm
- Internal Design: X10 Type
- Plastic Retainer
- Metallic Shields
- Grease Fill Amount: H Fill (40%~50%)
- Lubricant: LY121 (Grease)
- ABEC Grade 1
- Electric Motor Quality
- Radial Play: 13.0μm~20.0μm

Ball Bearing Selection Process

To select a ball bearing part number and specification properly, it is necessary to fully understand the required performance of the ball bearing by confirming the structures, dimensions, environment, and conditions of each application using the ball bearing. The process of selecting a ball bearing is shown below.

Application Conditions, Environment, Required Performance

Application Conditions, Environment, Required Performance

Selecting Part Number

Selecting Part Number

Tolerance and Grades

Tolerance and Grades

Determining Performance Level

Determining Performance Level

Selecting Lubricant

Handling

Selecting the Proper Bearing

The following work sheet will prove to be very valuable in assisting you in the selection of the correct ball bearing for your application.

Application Conditions

Loads:

F_r _____ N F_{1r} _____ N
F_a _____ N F_{1a} _____ N
F_i _____ N F_{2r} _____ N
a _____ mm F_{2a} _____ N
b _____ mm
c _____ mm

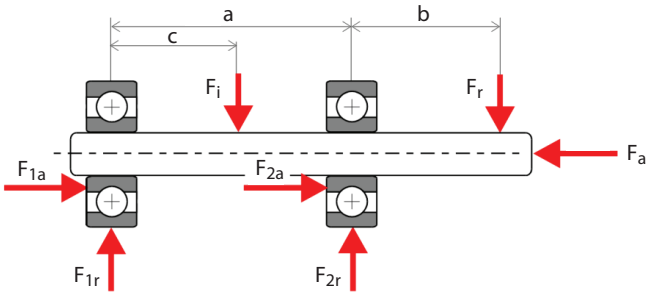

Load Type:
Continuous: ☐
Shock: ☐
Preload Force: _____N
Applied to: ☐ Inner Ring
☐ Outer Ring

Fitting - Shaft:
Diameter: _____
Tolerance: _____
Material: _____
Roundness: _____
Surface Finish: Ra _____ µm

Fitting - Housing
Diameter: _____
Tolerance: _____
Material: _____
Roundness: _____
Surface Finish: Ra _____ µm

Rotation:
Speed in RPM: _____
Inner Ring Rotation: ☐
Outer Ring Rotation: ☐
Continuous: ☐
Reverse: ☐
Oscillating: ☐
Oscillating Angle: ☐
Other Rotational Details: _____

Environment:
Ambient Temp. Range: _____C° to _____C°
Working Temp: _____C°
Shaft Temp: _____C°
Housing Temp: _____C°
Dust: ☐
Humidity: ☐
Water: ☐
Chemicals: ☐
Autoclave: ☐
Other Details: _____

Torque:
Torque Sensitive: Yes ☐ No ☐
Max Torque Increase Allowed: _____ N-mm
Output Torque of Motor: _____ N-mm

Misalignment:
Shaft Alignment Tolerance: _____ mm
Bearing Concentricity: _____ mm

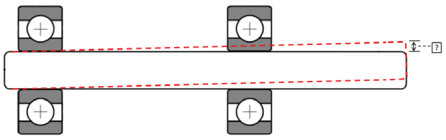

Test Plan:
Type of Test (life, salt spray, etc.): _____
Run time of test: _____ hours. Duration of test: _____ weeks.
Additional Details: _____

Other Information:
Plastic Compatibility Concerns: Yes ☐ No ☐ Type of Plastic: _____
Life Expectancy: _____ Hours
Current Supplier: _____ Current Part Number: _____
Issues with Current Bearing: _____

Additional Application Details: _____

Application Conditions, Environment, Required Performance

The structure of the application, dimensions of the equipment or component which the bearing will be assembled to, and the application environment and conditions need to be confirmed. It is necessary to take several factors into account in order to decide the bearing part number and specification. It is also important to take market factors into account for selecting the bearing part number and specification.

Structure & Function of the Equipment

The required dimensions and performance need to be based on an understanding of the structure and function of the equipment. Structure limitations are becoming more severe due to downsizing of applications. We recommend taking into account the items listed below and selecting properly to achieve the required bearing performance.

Application Environment

The bearing material, retainer and lubricants are selected based on the ranges of predicted temperature and humidity. The proper preload and lubricant are selected based on the vibration conditions. The presence of dust influences the selection of the shield or seal type. Depending on the operation conditions, bearing temperature is occasionally higher than environmental temperature.

Loads

The bearing dimension (Part Number) is selected based on the magnitude, position, and direction of loads applied to the bearing. It is necessary to review the structure of the equipment to determine if excessive loads would be applied to the bearing. If so, select a larger size bearing or decrease the loads.

Material and Dimensions of the Shaft and Housing

The dimensions and tolerances of the bore diameter, outer diameter, and width are selected based on the dimensions and material of the shaft and housing.

Temperature changes can affect the bearing internal clearance if there are differences in linear expansion coefficients of the shaft, housing, and bearing materials.

Speed, Rotation Precision, Rotation Ring

Dimensional tolerance, retainer, clearance, preload, and lubricant are selected based on speed, rotation precision, and rotation conditions (continuous/intermittent/back and forth/outer or inner ring rotation).

Torque

Torque can be classified into either starting torque or running torque. When an application is torque sensitive, enclosure types, lubricant types, fill amount, and retainer types need to be considered carefully.

Noise

When an application is noise sensitive, it is necessary to take bearing noise characteristics, lubricants, and preloads into account. Care must be taken during installation and handling. Improper installation, handling damage, or contamination could worsen the noise level.

Life

Although rating life is defined in JIS B 1518, life can be defined in various ways because it is affected by the application and the progress of degradation for the required performance level (noise, torque, runout, etc.) for each customer. The various types of life include rating life, noise life, performance life, and lubricant life.

Regulated Substance(s)

In recent years, various regulations have been established for environment, health and safety. It is necessary to confirm if regulated substances listed in the laws are present or not. Substances harmful to the environment and humans are restricted.

Material

Ball bearing performance is significantly influenced by the selection of the proper material for components such as balls, inner and outer rings.

Bearings are exposed to severe stress. The contact area of the outer and inner rings, as well as the balls, are repeatedly exposed to stress exceeding 1,000 MPa. Material type, purity, and hardness are very important factors for long bearing life under repeated high stresses.

High carbon chromium bearing steel and high corrosion-resistant martensitic stainless steels are used for raceway rings and balls in our products.

High carbon chromium bearing steel rings and balls are made from high quality vacuum outgassed steel (JIS G 4805, SUJ2, AISI/SAE52100 or equivalent material). With proper heat treatment, they have high load capacity, longer life and low noise levels.

Minebea developed stainless steel "DD400." The hardness of DD400 after heat treatment is higher than that of SUS440C. The DD400 material also shows longer life, and high load capacity.

The noise level of DD400 material is close to that of chromium steel because the carbon is dispersed spherically. From results of tests based on ASTM-A380, the corrosion resistance of DD400 material is equal to SUS440C.

To meet longer life and low noise level requirements, ball bearings with ceramic balls are also available. When compared to the conventional chromium bearing steel balls, improved noise level and life can be achieved by using ceramic balls (Silicon Nitride) with the use of conventional chromium rings. The extremely low conductive characteristics (insulation properties) of silicon nitride protect bearings from electric corrosion, which is generated under a conductive environment. In addition, torque reduction can be expected because the ceramic has less mass than bearing steel.

Chemical Composition of Materials

Chromium Bearing Steel

Spec	Symbol	Chemical Composition (wt%)						
		C	Si	Mn	P	S	Cr	Mo
JIS G 4805	SUJ2	0.95 ~ 1.10	0.15 ~ 0.35	0.50 MAX	0.025 MAX	0.025 MAX	1.30 ~ 1.60	-
AISI/SAE	E52100	0.98 ~ 1.10	0.15 ~ 0.35	0.25 ~ 0.45	0.025 MAX	0.025 MAX	1.30 ~ 1.60	-

Stainless Steel

Spec	Symbol	Chemical Composition (wt%)						
		C	Si	Mn	P	S	Cr	Mo
-	DD400	0.60 ~ 0.75	1.00 MAX	1.00 MAX	0.03 MAX	0.02 MAX	11.50 ~ 13.50	030 MAX

Shield and Seal

Compared to the open type, the shielded and sealed bearing types provide better protection from contamination and grease leakage. They are selected based on the application type and environment.

Shield (Snap Ring Type)

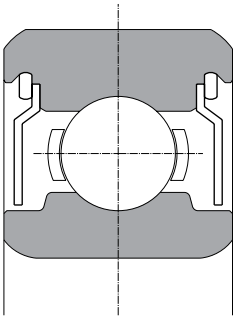

NMB part number symbol: ZZ

- Components are shield and snap ring.
- The shield is secured in the outer ring with a snap ring.
- No contact between shield bore and circumference of inner ring land.

Shield

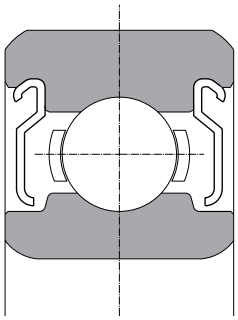

NMB part number symbol: KK or HH
JIS part number symbol: ZZ

- The shield is secured directly in the outer ring.
- No contact between shield bore and circumference of outer ring land.

Rubber Seal

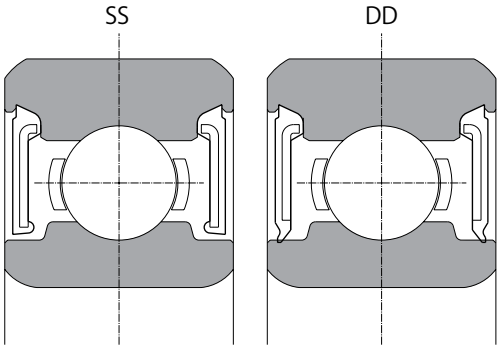

Common symbol: SS and DD

- Rubber seal with steel insert is secured directly in the outer ring.
- Seals contact circumference of inner ring in DD type, and do not contact in SS type.
- DD is highly sealed, but torque to rotate is higher than non-contact enclosures.

Retainer

Retainers keep the balls separated and equally spaced. Retainer types are set based on the bearing size but can be selected based on the required performance.

Ribbon Retainer

Composed of two stamped steel parts. The balls are held between the two steel parts and the tabs of one of the steel parts are bent over the second steel part to fasten them together. This is the most common type.

Crown Retainer

Composed of a stamped steel part. The small difference in inner and outer diameters of the retainer allows them to be used for thin type and very small ball bearings.

Plastic Retainer

Composed of molded or machined plastic, including Polyamide, Polyacetal and others. It is used for high speed rotation and low noise level.

Load Rating and Rating Life

In general, if bearings are made of high quality steel with high level production skills, the load rating and rating life can be calculated based on the specification defined in JIS and ISO.

Life of a Ball Bearing

The required life of a ball bearing depends on the application and requirements of the equipment. Because there are many different applications for the equipment, definitions of life also vary. Therefore, life needs to be defined based on the application and requirements.

There are different types of life definitions: rating life, noise life, lubricant life, and performance life. The noise life is considered when bearings become noisier than the originally set level. The lubricant life is considered as when lubricants lose their function due to degradation. The performance life is considered when speed and runout go beyond the acceptable limits and no longer meets the application requirements.

In this section, the rating life of single row deep groove ball bearings, which is specified in JIS B 1518, is explained. Rating life is a predicted life calculated based on the basic dynamic radial load rating.

Basic Rating Life (L_{10})

Defined as the life associated with 90 percent reliability.

According to ABMA Std. 9, for an individual bearing, or a group of apparently identical bearings operating under the same conditions, the life associated with 90% reliability, with contemporary, commonly used material and manufacturing quality, and under conventional operating conditions.

The calculation is based on JIS B 1518

$$L_{10} = \left(\frac{C_r}{P_r}\right)^3$$

L_{10}: Basic rating life (10^6 revolutions)
C_r: Basic dynamic radial load rating (N)
P_r: Dynamic equivalent radial load (N)

If the speed is constant, the life is usually expressed in hours. The relationship between basic rating life and life hours is as follows:

$$L_{10} = \left(\frac{10^6}{60n}\right) \times \left(\frac{C_r}{P_r}\right)^3$$

L_{10}: Hours (h)
n: Speed (rpm)

Basic Dynamic Radial Load Rating (C_r)

Defined as the calculated, constant radial load that a group of apparently identical bearings will theoretically endure for a rating life of one million revolutions. The calculation is explained in JIS B 1518. The Basic Dynamic Radial Load Ratings are for reference only.

Dynamic Equivalent Radial Load (P_r)

Bearings subjected to primarily dynamic radial loads are often also subject to some axial force. To interpret this combined radial and axial load it is convenient to consider a hypothetical load with a constant magnitude passing through the center of the bearing. This hypothetical load is referred to as the Dynamic Equivalent Radial Load and is calculated with the following equation.

$$P_r = XF_r + YF_a$$

X, Y: These values can be found in the table that follows.

F_r: Radial Load (N)
F_a: Axial Load (N)

Relative Axial Load $\frac{F_a}{Z*D_w^2}$ (N)	e	$F_a/F_r \le e$ X	$F_a/F_r \le e$ Y	$F_a/F_r > e$ X	$F_a/F_r > e$ Y
0.172	0.19				2.30
0.345	0.22				1.99
0.689	0.26				1.71
1.03	0.28				1.55
1.38	0.30	1	0	0.56	1.45
2.07	0.34				1.31
3.45	0.38				1.15
5.17	0.42				1.04
6.89	0.44				1.00

Z: Number of balls
D_W: Diameter of ball (mm)
*X, Y, e values which are not in the above table can be determined by linear interpolation.
*The number of rows for calculating the axial load ratio (specified in JIS) is excluded from the table because it is for a single row bearing.

Calculation Example

Under the conditions below, the L_{10} life of an R-830ZZ bearing is calculated.

Basic Dynamic Radial Load Rating (C_r):	553N
Ball Diameter (D_W):	1.5875mm
Number of Balls: (Z):	6
Speed in rpm (n):	3600 min^{-1}
Radial Load (F_r):	6N
Axial Load (F_a):	8N

1. Calculate Relative Axial Load

$$\frac{F_a}{ZD_W^2} = \frac{8}{6\,(1.5875^2)} = 0.529$$

2. Calculate e Value to the Relative Axial Load

$$e = 0.22 + \frac{(0.529 - 0.345)}{(0.689 - 0.345)} \times (0.26 - 0.22) = 0.24$$

3. Calculate the Ratio of Radial and Axial Loads

$$\frac{F_a}{F_r} = \frac{8}{6} = 1.33$$

4. Compare the Load Ratio and e Value

$$\frac{F_a}{F_r} = 1.33,\ e = 0.24 \quad \therefore \frac{F_a}{F_r} > e$$

5. Determine X and Y

$$X = 0.56$$

$$Y = 1.99 - \frac{(0.529 - 0.345)}{(0.689 - 0.345)}\,(1.99 - 1.71) = 1.84$$

6. Calculate Dynamic Equivalent Load

$$P_r = 0.56 \times 6 + 1.84 \times 8 = 18.08$$

7. Calculate Life Hours

$$L_{10} = \left(\frac{10^6}{60 \times 3600}\right) \times \left(\frac{553}{18.08}\right)^3 = 132473h$$

Basic rating life =132473h

The basic static radial load rating and static equivalent radial load of a ball bearing are specified in JIS B 1519,"calculation method of static load rating of a ball bearing."

Basic Static Radial Load Rating (C_{or})

The static radial load rating (C_{or}) given on the product listing pages is the radial load which a non-rotating ball bearing will support without damage, and will continue to provide satisfactory performance and life.

The static radial load rating is dependent on the maximum contact stress between the balls and either of the two raceways. The load ratings shown were calculated in accordance with the ABMA standard. The ABMA has established the maximum acceptable stress level resulting from a pure radial load, in a static condition, to be 4.2 GPa (609,000 psi).

Static Equivalent Radial Load (P_{or})

For a stationary or slowly rotating bearing, the theoretical static radial load that produces the same contact stress at the area of contact between the most heavily stressed ball and raceway, as the contact that occurs under the actual load conditions.

Using the calculations below, the larger of the two values should be used as the Static Equivalent Radial Load:

$$P_{or} = X_o F_r + Y_o F_a$$
$$P_{or} = F_r$$

X_o, Y_o : JIS B 1519

Coefficient of deep groove ball bearing $X_o = 0.6$

$Y_o = 0.5$

F_r: Radial Load (N)

F_a: Axial Load (N)

Tolerance and Precision Grade

Bearings are classified into certain precision grades. The tolerances for each grade are found in JIS and ANSI/ABMA standards. Minebea's products are based on JIS B 1514-1,-3, ANSI/ABMA Std. 12.2 and ANSI/ABMA Std. 20.

The symbols used in the specification are as follows:

Symbol

Dimensions	
d	Nominal Bore Diameter
D	Nominal Outside Diameter
D_1	Outer Ring Flange Outside Diameter
B	Nominal Inner Ring Width
C	Nominal Outer Ring Width
r	Chamfer Dimension of Inner Ring or Outer Ring
Dimensional Differences	
Δ_{ds}	Dimensional Difference of Bore Diameter
Δ_{dmp}	Dimensional Difference of Mean Bore Diameter in the Plane of Rotation
(Δ_{dm})	Dimensional Difference of Mean Bore Diameter
Δ_{Ds}	Dimensional Difference of Outside Diameter
Δ_{Dmp}	Dimensional Difference of Mean Outside Diameter in the Plane of Rotation
(Δ_{Dm})	Dimensional Difference of Mean Outside Diameter
Δ_{Bs}	Dimensional Difference of Inner Ring Width
Δ_{Cs}	Dimensional Difference of Outer Ring Width
Δ_{D1s}	Deviation of a Single Flange Outside Diameter
Δ_{C1s}	Deviation of a Single Width of the Outer Ring Flange
Limit Values of Chamfer/Radius Dimension	
r_s	Chamfer Dimension of Inner Ring or Outer Ring
$r_{s\,min}$	Minimum Dimension Limit of Inner Ring and Outer Ring Chamfer
$r_{s\,max}$	Maximum Dimension Limit of Inner Ring and Outer Ring Chamfer
Inequality of Dimensions	
V_{Bs}	Variation of Inner Ring Width
V_{Cs}	Variation of Outer Ring Width
V_{C1s}	Variation of Flange Width
Rotation Precision	
K_{ia} (K_i)	Radial Runout of Inner Ring
S_{ia} (S_i)	Axial Runout of Inner Ring
S_d (S_{di})	Side Runout of Inner Ring [Runout of Inner Ring Reference Face with respect to the bore]
K_{ea} (K_e)	Radial Runout of Outer Ring
S_{ea} (S_e)	Axial Runout of Outer Ring
$S_D(S_D)$	Side Runout of Outer Ring [variation of outside surface generatrix inclination with respect to the outer ring reference face]
S_{D1}	[variation of outside surface generatrix inclination with respect to the outer ring flange back face]
S_{ea1}	Axial Runout of Outer Ring Flange Back Face

Remark ( ) is defined by ANSI/ABMA. Reference [ ] is the expression used in previous JIS. Attention: Above is only for radial ball bearing.

Referenced from ANSI/ABMA Std. 20

Inner Ring: 0.6mm < d ≤ 2.5mm

Unit: µm

Grade	Dimensional Difference				Radial Runout	Perpendicularity	Axial Runout	Dimensional Difference of Width		Variation of Width
	Δd_{mp}		Δ_{ds}		K_{ia}	S_d	S_{ia}	ΔB_s		V_{Bs}
ABEC	High	Low	High	Low	MAX	MAX	MAX	High	Low	MAX
1	0	-8	-	-	10	-	15	0	-40	12
3	0	-7	-	-	5	-	10	0	-40	12
5	0	-5	-	-	4	7	7	0	-40	5
7	0	-4	0	-4	2.5	3	3	0	-40	2.5
9	0	-2.5	0	-2.5	1.5	1.5	1.5	0	-40	1.5

Inner Ring: 2.5mm < d ≤ 10mm

Unit: µm

Grade	Dimensional Difference				Radial Runout	Perpendicularity	Axial Runout	Dimensional Difference of Width		Variation of Width
	Δd_{mp}		Δ_{ds}		K_{ia}	S_d	S_{ia}	ΔB_s		V_{Bs}
ABEC	High	Low	High	Low	MAX	MAX	MAX	High	Low	MAX
1	0	-8	-	-	10	-	20	0	-120	15
3	0	-7	-	-	6	-	15	0	-120	15
5	0	-5	-	-	4	7	7	0	-40	5
7	0	-4	0	-4	2.5	3	3	0	-40	2.5
9	0	-2.5	0	-2.5	1.5	1.5	1.5	0	-40	1.5

Inner Ring: 10mm < d ≤ 18mm

Unit: µm

Grade	Dimensional Difference				Radial Runout	Perpendicularity	Axial Runout	Dimensional Difference of Width		Variation of Width
	Δd_{mp}		Δ_{ds}		K_{ia}	S_d	S_{ia}	ΔB_s		V_{Bs}
ABEC	High	Low	High	Low	MAX	MAX	MAX	High	Low	MAX
1	0	-8	-	-	10	-	20	0	-120	20
3	0	-7	-	-	7	-	20	0	-120	20
5	0	-5	-	-	4	7	7	0	-80	5
7	0	-4	0	-4	2.5	3	3	0	-80	2.5
9	0	-2.5	0	-2.5	1.5	1.5	1.5	0	-80	1.5

Referenced from ANSI/ABMA Std. 20.0

Outer Ring: 2.5mm < D ≤ 6mm

Unit: µm

Grade	Dimensional Difference				Radial Runout	Perpendicularity	Axial Runout	Dimensional Difference of Width		Variation of Width
	ΔD_{mp}		ΔD_s		K_{ea}	S_D	S_{ea}	ΔC_s		V_{Cs}
ABEC	High	Low	High	Low	MAX	MAX	MAX	High	Low	MAX
1	0	-8	-	-	15	-	15	0	-40	12
3	0	-7	-	-	8	-	10	0	-40	12
5	0	-5	-	-	5	8	8	0	-40	5
7	0	-4	0	-4	3	4	5	0	-40	2.5
9	0	-2.5	0	-2.5	1.5	1.5	1.5	0	-40	1.5

Outer Ring: 6mm < D ≤ 18mm

Unit: µm

Grade	Dimensional Difference				Radial Runout	Perpendicularity	Axial Runout	Dimensional Difference of Width		Variation of Width
	ΔD_{mp}		ΔD_s		K_{ea}	S_D	S_{ea}	ΔC_s		V_{Cs}
ABEC	High	Low	High	Low	MAX	MAX	MAX	High	Low	MAX
1	0	-8	-	-	15	-	20	0	-120	15
3	0	-7	-	-	8	-	15	0	-120	15
5	0	-5	-	-	5	8	8	0	-40	5
7	0	-4	0	-4	3	4	5	0	-40	2.5
9	0	-2.5	0	-2.5	1.5	1.5	1.5	0	-40	1.5

Outer Ring: 18mm < D ≤ 30mm

Unit: µm

Grade	Dimensional Difference				Radial Runout	Perpendicularity	Axial Runout	Dimensional Difference of Width		Variation of Width
	ΔD_{mp}		ΔD_s		K_{ea}	S_D	S_{ea}	ΔC_s		V_{Cs}
ABEC	High	Low	High	Low	MAX	MAX	MAX	High	Low	MAX
1	0	-9	-	-	15	-	25	0	-120	20
3	0	-8	-	-	9	-	15	0	-120	20
5	0	-6	-	-	6	8	8	0	-80	5
7	0	-5	0	-5	4	4	5	0	-80	2.5
9	0	-4	0	-4	2.5	1.5	2.5	0	-80	1.5

Referenced from JIS B 1514-1

Flange Outside Diameter Tolerance

Unit: µm

D_1 (mm)		D_{1s}			
		Non-Locating Flange		Locating Flange	
Over	Incl.	High	Low	High	Low
	10	+220	-36	0	-36
10	18	+270	-43	0	-43
18	30	+330	-52	0	-52

Tolerances of Flange Width and Tolerance of Rotation Precision related to Flange

Unit: µm

D (mm)		ABEC 1, 3		ABEC 5, 7, 9		ABEC 1, 3	ABEC 5	ABEC 7	ABEC 9
		ΔC_{1s}				V_{C1s}			
Over	Incl.	High	Low	High	Low	MAX			
2.5*	30	0	-40** -120	0	-40*** -80	12** 15*** 20	5	2.5	1.5

D (mm)		ABEC 5	ABEC 7	ABEC 9	ABEC 5	ABEC 7	ABEC 9
		S_{D1}			S_{ea1}		
Over	Incl.	MAX			MAX		
2.5*	18	8	4	1.5	11	7	3
18	30	8	4	1.5	11	7	4

*D = 2.5mm is included in this dimension division
**The values apply only up to and including d = 2.5mm
***The values apply only up to and including d = 10mm

Referenced from JIS B 1514-3

Maximum Values of Chamfer Dimension for Radial Bearings

Unit: mm

$r_{s\,min}$	d		$r_{s\,max}$	
	Over	Incl.	Radial Direction	Axial Direction
0.05	-	-	0.1	0.2
0.08	-	-	0.16	0.3
0.1	-	-	0.2	0.4
0.15	-	-	0.3	0.6
0.2	-	-	0.5	0.8
0.3	-	40	0.6	1
	40	-	0.8	1
0.6	-	40	1	2
	40	-	1.3	2
1	-	50	1.5	3
	50	-	1.9	3

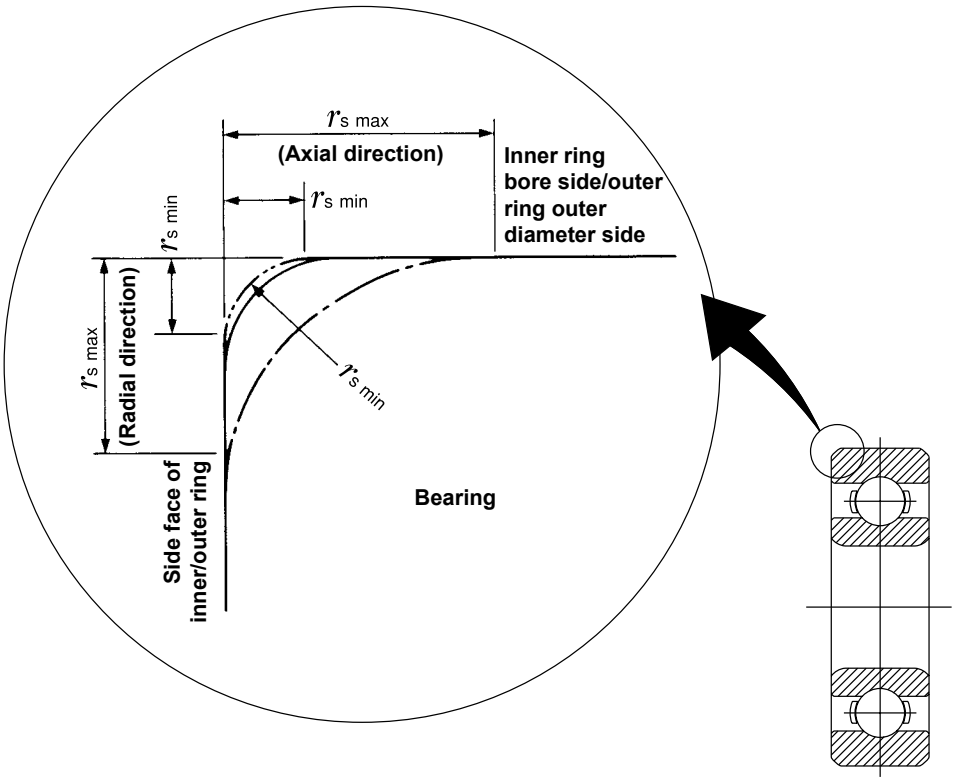

Measurement Methods

General rules regarding verifying ball bearing dimensions and runout are specified in JIS B 1515-2.
Please refer to the following for the dimensions and measurement methods of runout.

Dimensions

Bore (d_s)

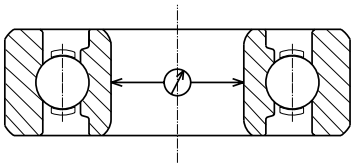

Figure 2-1
Measure the amount of change within the radial plane.

Inner Ring Width (B_s)

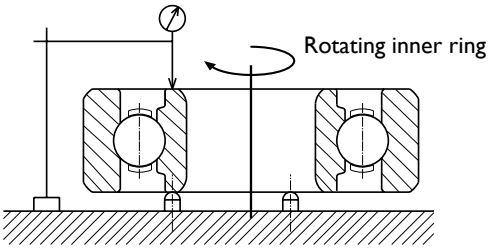

Figure 2-3
Measure while rotating inner ring one revolution.

Outer Diameter (D_s)

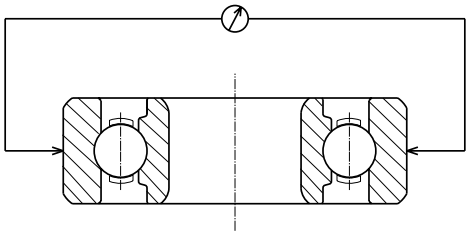

Figure 2-2
Measure the amount of change within the radial plane.

Outer Ring Width (C_s)

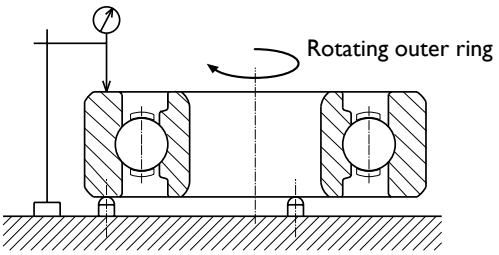

Figure 2-4
Measure while rotating outer ring one revolution.

Runout

Side Runout of Inner Ring (S_d)

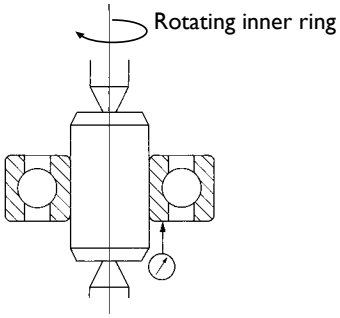

Figure 2-5
Read the indicator while rotating inner ring one revolution.

Outside Cylindrical Surface Runout with Side (S_D)

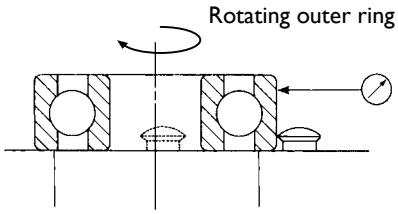

Figure 2-6
Read the indicator while rotating outer ring one revolution.

Radial Runout of Inner Ring (K_{ia})

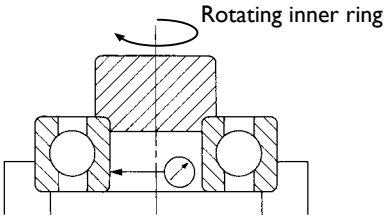

Figure 2-7
Read the indicator while rotating inner ring one revolution with dead weight placed on inner ring.

Radial Runout of Outer Ring (K_{ea})

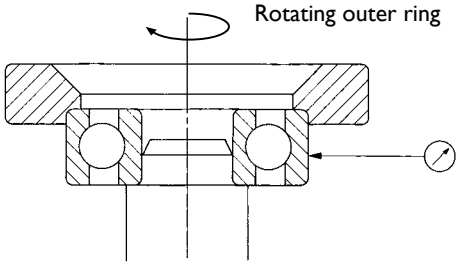

Figure 2-8
Read the indicator while rotating outer ring one revolution with dead weight placed on outer ring.

Axial Runout of Inner Ring (S_{ia})

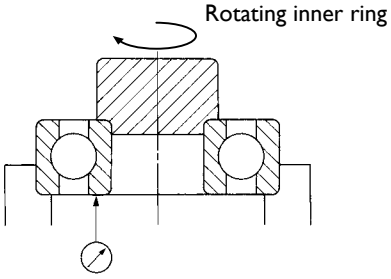

Figure 2-9
Read the indicator while rotating inner ring one revolution with dead weight placed on inner ring.

Axial Runout of Outer Ring (S_{ea})

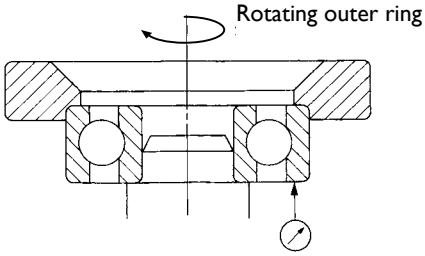

Figure 2-10
Read the indicator while rotating outer ring one revolution with dead weight placed on outer ring.

Radial Internal Clearance

The radial internal clearance of a ball bearing affects life, noise, vibration, and heat generation. It is important to select the appropriate internal clearance for each application.

The three types of internal clearance of a ball bearing are radial clearance, axial clearance, and moment clearance.

Radial internal clearance decreases when a ball bearing is fitted to either a shaft or housing with interference. Radial internal clearance is a specified value in the NMB or JIS part number, as shown in the following tables.

The fits and temperature affect the radial internal clearance. Therefore, actual application conditions need to be reviewed when radial internal clearance is selected.

Radial Clearance (G_r)

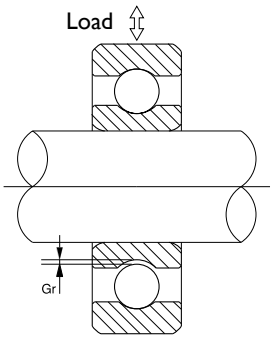

Figure 2-11
The displacement generated by moving the outer ring in the radial direction while securing the inner ring.

Axial Clearance (G_t)

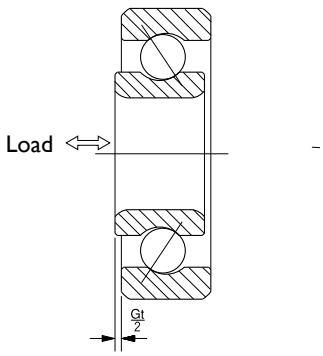

Figure 2-12
The displacement generated by moving the inner ring in the axial direction while securing the outer ring.

Moment Clearance (θ)

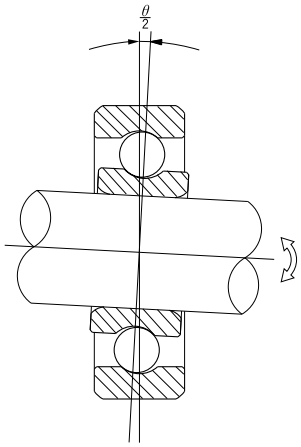

Figure 2-13
The angular displacement generated by tilting the inner ring in the axial direction while securing the outer ring.

Radial Clearance of NMB Part Number

Clearance Symbols	Clearance (µm)
P13	2.5 ~ 7.5
P24	5.0 ~ 10.0
P25*	5.0 ~ 12.5
P58	12.5 ~ 20.0

Radial Clearance of JIS Part Number

Clearance Symbols	Clearance (µm)
M2	3 ~ 8
M3*	5 ~ 10
M4	8 ~ 13
M5	13 ~ 20

*Standard

Fits

When a ball bearing is used, it is not used only by itself. It is always fitted to either a shaft or a housing bore. Fit is the value of tightness between the shaft and bearing bore when the bearing is installed. Fit can also be the tightness between the housing bore and the bearing outside diameter. Fits are classified into clearance fit, intermediate fit, and transition fit.

Fits

Fits prevent bearings from having unfavorable slip called "Creep" by firmly securing the inner ring and outer ring on the shaft and in the housing, respectively. Fits also minimize vibration during rotation. When creep happens, abnormal heat and wear particles can be generated. Abnormal heat hastens the degradation of grease and retainers. Wear particles could migrate inside the bearing, and cause vibration and surface degradation. It is necessary to choose a proper fit for each application because improper fits can not only degrade the bearing performance, but also they could cause seizure due to heat generation and premature failure. In the case of interference fits, the interference causes a change in radial internal clearance. The change in radial clearance generated by interference can be calculated as shown below.

Decrease in Internal Clearance Due to Fits

Interference Fit of the Inner Ring to the Shaft

The sketches drawn in solid lines and dotted lines are the bearing prior to fit, and the bearing after fit, respectively. When press fit with an interference (i) the inner ring groove diameter (d_2) increases by an amount (δ). This value (δ) is also equal to the decrease in radial internal clearance.

Press fits of the inner ring to the shaft:

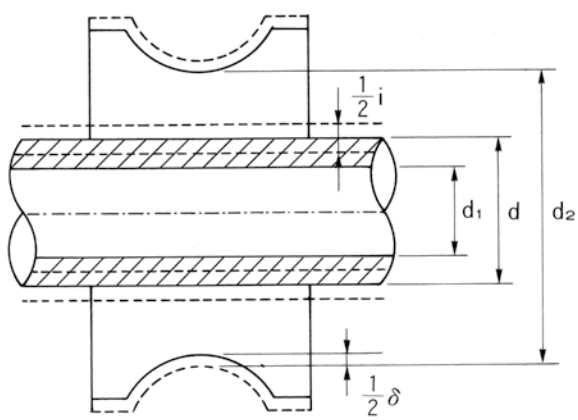

d: Nominal Bore Diameter
Nominal Outside Diameter of the Shaft
d_1: Shaft Bore

(In the case of Solid Shafts: $\frac{(d/d_1)^2+1}{(d/d_1)^2-1} = 1$)

d_2: Inner Ring Groove Diameter
i: Interference (i/2 in radial direction)
E_b: Young's Modulus of Inner Ring (outer ring)
E_s: Young's Modulus of Shaft Material
m_b: Poisson's Ratio of Inner Ring (outer ring)
m_s: Poisson's Ratio of Shaft Material

$$\delta = \frac{2i(d_2/d)}{\left\{(d_2/d)^2-1\right\}\left[\left\{\frac{(d_2/d)^2+1}{(d_2/d)^2-1}+\frac{1}{m_b}\right\}+\frac{E_b}{E_S}\left\{\frac{(d/d_1)^2+1}{(d/d_1)^2-1}-\frac{1}{m_s}\right\}\right]}$$

Interference Fit of the Outer Ring to the Housing

The sketches drawn in solid lines and dotted lines are the bearing prior to fit, and the bearing after fit, respectively. When it is press fit with an interference (I) the outer ring groove diameter D_1 decreases by an amount (Δ). This amount (Δ) is also equal to the decrease in radial clearance.

Press fits of the inner ring to the housing:

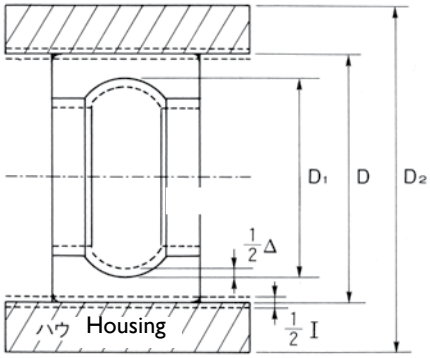

D: Nominal outside fiameter of outer ring, Nominal housing bore
D_1: Outer ring groove diameter
D_2: Housing outer diameter
I: Interference (I/2 in radial direction)
E_h: Young's Modulus of housing material
m_h: Poisson's Ratio of housing material

$$\Delta = \frac{2\,I\,(D/D_1)}{\left\{(D/D_1)^2-1\right\}\left[\left\{\frac{(D/D_1)^2+1}{(D/D_1)^2-1}-\frac{1}{m_b}\right\}+\frac{E_b}{E_h}\left\{\frac{(D_2/D)^2+1}{(D_2/D)^2-1}+\frac{1}{m_h}\right\}\right]}$$

Securing with Adhesive

When the bearing is fit to the shaft and housing with adhesive without interference, it is necessary to select the proper clearance to enhance the effectiveness of the adhesive. It is recommended to consult with the adhesive manufacturer because the proper clearance depends on the type of adhesive. Please be aware that the roundness of the ring raceways could deteriorate due to the curing stress of the adhesive.

Referenced from JIS B 0401-1

Deviation of Holes for Common Fits

Unit: μm

Nominal Dimensions (mm)		G	H			JS			K			M			N		P
Over	Incl.	G7	H5	H6	H7	JS5	JS6	JS7	K5	K6	K7	M5	M6	M7	N6	N7	P7
-	3	+12	+4	+6	+10	±2	±3	±5	0	0	0	-2	-2	-2	-4	-4	-6
		+2	0	0	0				-4	-6	-10	-6	-8	-12	-10	-14	-16
3	6	+16	+5	+8	+12	±2.5	±4	±6	0	+2	+3	-3	-1	0	-5	-4	-8
		+4	0	0	0				-5	-6	-9	-8	-9	-12	-13	-16	-20
6	10	+20	+6	+9	+15	±3	±4.5	±7.5	+1	+2	+5	-4	-3	0	-7	-4	-9
		+5	0	0	0				-5	-7	-10	-10	-12	-15	-16	-19	-24
10	18	+24	+8	+11	+18	±4	±5.5	±9	+2	+2	+6	-4	-4	0	-9	-5	-11
		+6	0	0	0				-6	-9	-12	-12	-15	-18	-20	-23	-29
18	30	+28	+9	+13	+21	±4.5	±6.5	±10.5	+1	+2	+6	-5	-4	0	-11	-7	-14
		+7	0	0	0				-8	-11	-15	-14	-17	-21	-24	-28	-35

Deviation of Shafts for Common Fits

Unit: µm

Nominal Dimensions (mm)		f	g		h			js			k			m		n	p	r
Over	Incl.	f6	g5	g6	h4	h5	h6	js4	js5	js6	k4	k5	k6	m5	m6	n6	p6	r6
-	3	-6	-2	-2	0	0	0	±1.5	±2	±3	+3	+4	+6	+6	+8	+10	+12	+16
		-12	-6	-8	-3	-4	-6				0	0	0	+2	+2	+4	+6	+10
3	6	-10	-4	-4	0	0	0	±2	±2.5	±4	+5	+6	+9	+9	+12	+16	+20	+23
		-18	-9	-12	-4	-5	-8				+1	+1	+1	+4	+4	+8	+12	+15
6	10	-13	-5	-5	0	0	0	±2	±3	±4.5	+5	+7	+10	+12	+15	+19	+24	+28
		-22	-11	-14	-4	-6	-9				+1	+1	+1	+6	+6	+10	+15	+19

Referenced from JIS B 1566

Fits of Inner Ring in Radial Bearings*

Unit: µm

Bearing ABEC Rating	Rotating inner ring load or indeterminate direction load							Stationary inner ring load		
	Tolerance zone class of shaft**									
ABEC 1	r6	p6	n6	m6	k6	js6	h5	h6	g6	f6
ABEC 3	r6	p6	n6	m5	k5	js5	h5	h5	g5	f6
ABEC 5	-	-	-	m5	k4	js4	h4	h5	-	-
Fits	Interference					Intermediate				Clearance

Fits of Outer Ring in Radial Bearings*

Unit: µm

Bearing ABEC Rating	Stationary outer ring load				Indeterminate direction load or rotating outer ring load				
	Tolerance zone class of hole**								
ABEC 1	G7	H7	JS7	-	JS7	K7	M7	N7	P7
ABEC 3	G7	H6	JS6	-	JS6	K6	M6	N6	P7
ABEC 5	-	H5	JS5	K5	-	K5	M5	-	-
Fits	Interference fit		Intermediate fit						Clearance fit

*Tolerance of Bearing Bore is based on JIS B 1514-1.

**Symbol of Tolerance Zone Class is based on JIS B 0401.

***Tolerance of Outer Diameter of Bearings is based on JIS B1514-1.

Definitions

Rotating Inner Ring Load
The line of action of the load is rotating in relation to the inner ring of the bearing

Stationary Inner Ring Load
The line of action of the load does not rotate in relation to the inner ring of the bearing

Stationary Outer Ring Load
The line of action of the load does not rotate in relation to the outer ring of the bearing

Rotating Outer Ring Load
The line of action of the load is rotating in relation to the outer ring of the bearing

Indeterminate Direction Load
The direction of the load cannot be determined

Designs of Shaft and Housing

The shaft and housing dimensions and precision should be carefully designed to optimize the performance of the bearing in the application.

Shaft and Housing

Finish Precision of Shaft & Housing

When the bearings are installed, roundness of the bearings is degraded if the precision and surface roughness of the shaft and housing are not at satisfactory levels.

Fillet Radii of Corners of Shaft & Housing

The side faces of the shafts and housing (areas contacting the bearing's side face) should be at right angles to the shaft center line and fit surfaces. The maximum permissible radius (r_{as} max) of the fillet radii of the shaft and housing corners is smaller than or equal to the minimum permissible chamfer dimensions of the bearings.

Height of Shoulder

The height of the shaft and housing shoulders must be taller than the minimum permissible chamfer dimensions. They also need to contact the side faces of the bearing inner and outer rings.

The minimum height of the housing shoulder (h), must be four times the chamfer dimension (r_{as}). Please refer to the table below and Figure 2-14 for dimensions.

Referenced from JIS B 1566

Unit: µm

Chamfer Dimensions of Inner and Outer Ring	Shaft and Housing		
	Radii of Rounding Corners	General Case *	Particular Case **
$r_{s\,min}$	$r_{as\,max}$	h (min)	
0.05***	0.05	0.2	0.2
0.08***	0.08	0.3	0.3
0.1	0.1	0.4	0.4
0.15	0.15	0.6	0.6
0.2	0.2	0.8	0.8
0.3	0.3	1.25	1

*The shoulder height needs to be greater than this when axial load applied is significant.
**This is used when axial load applied is insignificant.
***This is not specified in JIS B 1566.

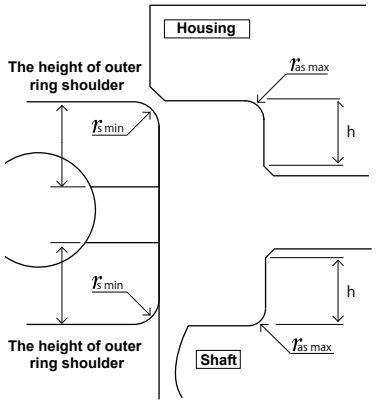

Figure 2-14

Shaft and Housing IT Grades

	Bearing Tolerance Class	Shaft	Housing
Roundness	ABEC 1-3	IT3/2 to IT4/2	IT4/2 to IT5/2
	ABEC 5-7		IT2/2 to IT3/2
Cylindricality	ABEC 1-3	IT3/2 to IT4/2	IT4/2 to IT5/2
	ABEC 5-7	IT2/2 to IT3/2	IT2/2 to IT3/2
Shoulder Runout	ABEC 1-3	IT3	IT3 to IT4
	ABEC 5-7		IT3
Roughness of fitting surfaces (Ra)	ALL	0.8	1.6

Nominal (Basic) Sizes (mm)		International Tolerance Grades								
OVER	UP TO INCL.	IT01	IT0	IT1	IT2	IT3	IT4	IT5	IT6	IT7
0	3	0.30	0.50	0.80	1.20	2.00	3.00	4.00	6.00	10.00
3	6	0.40	0.60	1.00	1.50	2.50	4.00	5.00	8.00	12.00
6	10	0.40	0.60	1.00	1.50	2.50	4.00	6.00	9.00	15.00
10	18	0.50	0.80	1.20	2.00	3.00	5.00	8.00	11.00	18.00
18	30	0.60	1.00	1.50	2.50	4.00	6.00	9.00	13.00	21.00
30	50	0.80	1.00	1.50	2.50	4.00	7.00	11.00	16.00	25.00
50	80	0.80	1.20	2.00	3.00	5.00	8.00	13.00	19.00	30.00
80	120	1.00	1.50	2.50	4.00	6.00	10.00	15.00	22.00	35.00
120	180	1.20	2.00	3.50	5.00	8.00	12.00	18.00	25.00	40.00
180	250	2.00	3.00	4.50	7.00	10.00	14.00	20.00	29.00	46.00
250	315	2.50	4.00	6.00	8.00	12.00	16.00	23.00	32.00	52.00
315	400	3.00	5.00	7.00	9.00	13.00	18.00	25.00	36.00	57.00
400	500	4.00	6.00	8.00	10.00	15.00	20.00	27.00	40.00	63.00
500	630			9.00	11.00	16.00	22.00	32.00	44.00	70.00
630	800			10.00	13.00	18.00	25.00	36.00	50.00	80.00
800	1000			11.00	15.00	21.00	28.00	40.00	56.00	90.00
1000	1250			13.00	18.00	24.00	33.00	47.00	66.00	105.00
1250	1600			15.00	21.00	29.00	39.00	55.00	78.00	125.00
1600	2000			18.00	25.00	35.00	46.00	65.00	92.00	150.00
2000	2500			22.00	30.00	41.00	55.00	78.00	110.00	175.00
2500	3150			26.00	36.00	50.00	68.00	96.00	135.00	210.00

***Tolerances according to ISO 286

Preload

The purpose of applying preload to a bearing is to improve the runout precision of the rotating axis, and to reduce vibration and noise. It is important to select the proper amount of preload and method for each application. Otherwise, bearing performance such as life, noise, and vibration will be degraded. Excessive heat could also be generated.

The Purpose of Preload

The necessary radial internal clearance in an assembled ball bearing may increase noise and rotational vibration in an application due to the movement of the balls inside the bearings. To combat the relative movement of the balls, an axial "preload" should be applied to the bearing, as shown in the diagram below. Preload increases the stiffness of the bearing and reduces potential noise and vibration.

The appropriate preload force depends on the size of the ball bearing. Higher preload will increase the bearing stiffness but excessive preload may result in premature failures. If insufficient preload is applied, vibration and fretting wear may occur inside of the bearing.

Figure 2-15

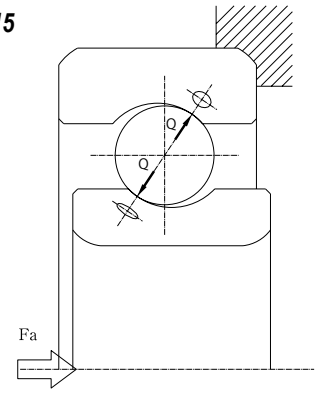

Optimum Preload

Minebea recommends an optimum preload based on the calculation of the optimum surface stress. When the preload is applied to the ball bearing, a contact ellipse is generated as a result of elastic deformation of the contact areas between the balls and raceways. The surface stress is given by dividing the loads, Q (ball loads), which are generated in the perpendicular direction at the contacts between the balls and raceways, by the surface areas of the contact ellipses.

In Figure 2-15, the contact ellipse area (S) between the balls and raceways is formulated as: $S = \pi ab$ (a: the major axis of the contact ellipse area, b: the minor axis of the contact ellipse area). P represents the average surface stress, and Q represents the loads generated in the perpendicular direction at the contact areas between the balls and raceways.

$$P = Q / S \text{ [MPa]}$$

If the preload is the dominant load applied to the bearing, the guideline to meet the noise life is as follows.

- *Over 10,000 hours noise life requirement.*
  The specific preload should not generate an average surface contact stress (P) higher than 800MPa.
- *5,000 - 10,000 hours noise life requirement (general products)*
  The specific preload should be generating an average surface contact stress (P) of roughly 1,000MPa.
- *Less than 5,000 hours noise life requirement (critical stiffness application)*
  The specific preload should be generating an average surface contact stress (P) of roughly 1,500MPa.

Simple calculation of preload using dynamic load rating (C_r)

- *Over 10,000 hours noise life requirement:*
  $0.5/100C_r$ - $1/100C_r$
- *5,000 - 10,000 hours noise life requirement:*
  $1/100C_r$ - $1.5/100C_r$
- *Less than 5,000 hours noise life requirement:*
  $1.5/100C_r$ - $2/100C_r$

Maximum Permissible Load

In general, a permanent deformation will occur if the average surface stress generated on high carbon chromium steel is greater than 2,700 MPa. So, even for a very short period of time, the loads should not generate greater than 2,700 MPa of average surface stress. Based on our experience, the loads applied to the bearing should not generate more than 1,600 MPa of average surface stress. Besides preload, other types of loads should also be considered because they could generate surface stress.

Preload and Stiffness

There are two basic methods of preloading: Solid Preload (Figure 2-16) and Spring Preload (Figure 2-17) shown on the following pages.

Solid Preload can be obtained by mechanically locking all of the rings in position. The advantages of this type of design are simplicity and high stiffness. However, expansion and shrinkage of the components due to temperature change can cause changes in preload.

The components could also wear, and eventually the preloads could be reduced.

Spring Preload (constant pressure preload) can be applied by using a coil spring, wave spring, etc. An advantage of spring preload is stability despite temperature variation. The disadvantages are complexity and low stiffness.

The preload can be applied in two directions: Duplex Face to Face (DF) (Figure 2-18) and duplex Back to Back (DB) (Figure 2-19). The stiffness is higher in DB.

Preload Method

Solid Preload

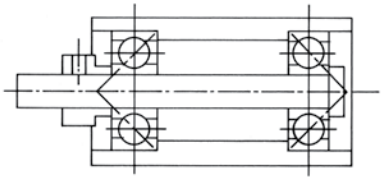

Figure 2-16

Spring Preload

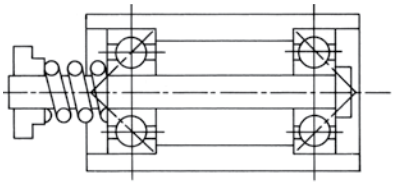

Figure 2-17

Preload Direction

Duplex Face to Face (DF)

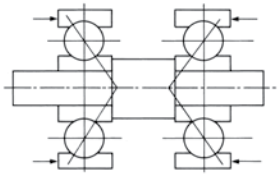

Figure 2-18

Duplex Back to Back (DB)

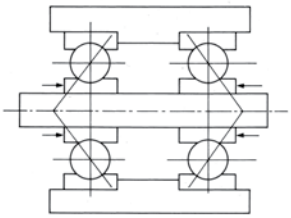

Figure 2-19

Displacement

When the loads are applied to the bearings, the displacement takes place at the contact points between the balls and raceways.

Radial Displacement

When the loads are applied in radial directions as shown in Figure 2-20, Q is expressed as: $Q = \frac{5}{Z} F_r$

(F_r, Q, and Z represent a radial load, the maximum load applied to the balls, and the number of balls, respectively.) Radial displacement at the contact points between balls and raceways is expressed below.

$$\delta = e_\delta \sqrt[3]{(\Sigma\rho)\, Q^2}$$

e_δ : Coefficient based on the relationship between balls and raceways

$\Sigma\rho$: Total major curvature

In order to determine the total displacement, the displacement between the balls inner ring and outer ring needs to be summed because the balls are contacting both the inner ring and outer rings.

δ_r : Total radial displacement

δ_i : Radial displacement between balls and inner ring raceway

δ_e : Radial displacement between balls and outer ring raceway

Total displacement is represented as follows:

$\delta r = \delta i + \delta e$

Figure 2-20

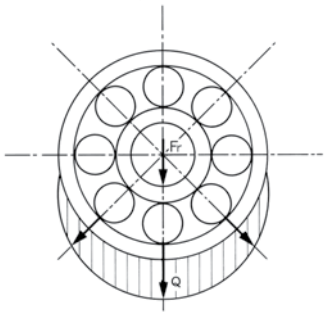

Axial Displacement

Axial displacement (F_a) can be calculated in the following series of calculations:

Initial Contact Angle (α_0)

For a bearing with the radial internal clearance (G_r) eliminated from an axial load, the initial contact angle can be calculated as follows.

$$\alpha_0 = \cos^{-1}\left\{1 - \frac{G_r}{2(r_i + r_e - D_w)}\right\}$$

G_r : Radial Internal Clearance
r_i : Inner Ring Groove Radius
r_e : Outer Ring Groove Radius
D_w : Ball Diameter

Relationship between Initial Contact Angle (α_0) and Contact Angle (α)

The relationship between the initial contact angle and the contact angle generated by applying an axial load (F_a) is expressed below. (Figure 2-21)

Figure 2-21

$$\frac{\cos\alpha_0}{\cos\alpha} = 1 + \frac{c \cdot D_w}{(r_i + r_e - D_w)}\left(\frac{F_a}{Z \cdot D_w{}^2 \cdot \sin\alpha}\right)^{\frac{2}{3}}$$

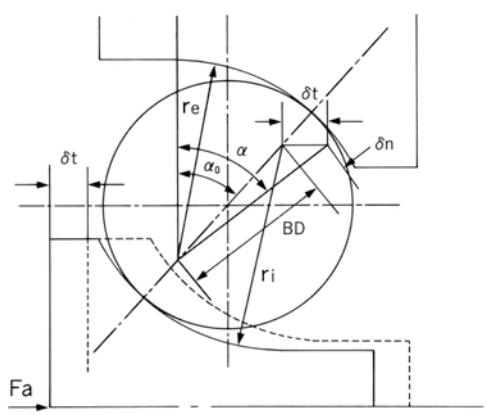

Displacement in the axial direction is calculated with the formula below:

$$\delta_t = (r_i + r_e - D_w)(\sin\alpha - \sin\alpha_0) + c\left(\frac{F_a}{Z}\right)^{\frac{2}{3}}\left(\frac{\sin\alpha}{D_w}\right)^{\frac{1}{3}}$$

c: Coefficient of Elastic Contact

Torque

The torque in ball bearings depends on assembly, preload, enclosures and lubricants. These need to be selected based on the required specification.

Torque

There are two kinds of torque: starting torque and running torque. Starting torque is the initial torque required to rotate a bearing in the static state. A ball bearing in the static state has the elastic contact deformation generated between the raceways and balls if the loads, like preload, are applied to the shaft. A force to overcome the elastic contact deformation is required to rotate the bearings. Also, a force to overcome the lubricant fill between the balls and raceways is required. The total torque required to overcome these is called "starting torque."

In addition, running torque includes friction between the balls and retainer and balls and the raceways.

The running torque has an impact on heat generation. In a motor application, bearing torque has an influence on the startup current, current rating, speed rating, current fluctuation, and speed fluctuation. The following are some of the factors and solutions.

Failure to Reach Speed

Some motors fail to reach the designed nominal speed. This could be caused by an excessive amount of grease, excessive interference fit, excessive preload, and use of churning type grease.

Excessive Startup Current

The possible factors to be considered for excessive startup current are: grease fill amount, high viscosity greases, preload, and fit conditions.

Speed Fluctuation

Speed fluctuation is the phenomenon where the rotation speed fluctuates unexpectedly and goes back to stable rotation speed after a while. This can be seen when grease loses its channel (wall) and is caught between the balls and raceways changing running resistance momentarily. Decreasing the grease fill amount, changing the grease to higher channeling grease, or non churning type are options to prevent having this issue.

Speed and Running Torque

Generally, torque increases as speed increases. Preload and grease are selected based on the speed.

Grease Fill Amount & Running Torque

Generally, torque increases as the grease fill amount increases. Life could be adversely affected if the grease fill amount is reduced for the purpose of lowering the torque.

Temperature & Running Torque

Generally, running torque increases as the temperature decreases. The reason for this is that the temperature reduction increases the viscosity of the base oil in the grease.

Grease Fill Position & Running Torque

Running torque may vary based on the grease fill position. Especially with viscous greases, the shear force of the grease can affect torque.

Load and Running Torque

Load affects both the starting and running torque. The torque is higher if preload is applied.

Vibration by Forced Rotation

Although the function of ball bearings is rotation, they also generate vibration during the rotation. The vibration that is changed by the frequency depending on the speed is called "vibration by forced rotation."

Calculation of Vibration by Forced Rotation

The vibration is generated in the axial, radial, and rotating directions. The vibration can be critical in some applications.

This vibration sometimes causes other parts of the assemblies to resonate as vibration energy is emitted. It is necessary to fully understand the application characteristics in order to select a suitable bearing and its specification.

Formula for Inner Ring Rotation

Vibration caused by Ball Revolution (f_a)

$$\frac{1}{2}\left(1-\frac{D_w}{D_{pw}}\cos\alpha_0\right)f_r$$

Vibration caused by Retainer Rotation (f_b)

$$\frac{1}{2}\left(1-\frac{D_w}{D_{pw}}\cos\alpha_0\right)f_r$$

Vibration caused by Ball Rotation (f_c)

$$\frac{1}{2}\left(\frac{D_{pw}}{D_w}-\frac{D_w}{D_{pw}}\cos^2\alpha_0\right)f_r$$

Vibration caused by Ball Pass (f_d) Zf_a

$Z\,(f_r\text{-}f_a)$

Vibration caused by Inner Ring Raceway Dents or Bumps (f_e)

Vibration in Axial Direction (f_{et}) $nZ(f_r\text{-}f_a)$

Vibration in Radial Direction (f_{er}) $f_{et} \pm f_r$

Vibration caused by Outer Ring Raceway Dents or Bumps (f_r) nZf_a

Vibration caused by Ball Surface Dents or Bumps (f_g)

Vibration in Axial direction (f_{gt}) $2nf_c$

Vibration in Radial direction (f_{gr}) $f_{gt} \pm fa$

Formula for Outer Ring Rotation

Vibration caused by Ball Revolution (F_a)

$$\frac{1}{2}\left(1+\frac{D_w}{D_{pw}}\cos\alpha_0\right)F_r$$

Vibration caused by Retainer Rotation (F_b)

$$\frac{1}{2}\left(1+\frac{D_w}{D_{pw}}\cos\alpha_0\right)F_r$$

Vibration caused by Ball Rotation (F_c)

$$\frac{1}{2}\left(\frac{D_{pw}}{D_w}-\frac{D_w}{D_{pw}}\cos^2\alpha_0\right)F_r$$

Vibration caused by Ball Pass (F_d) ZF_a

$Z\,(F_r\text{-}F_a)$

Vibration caused by Inner Ring Raceway Dents or Bumps (F_e) nZF_a

Vibration caused by Outer Ring Raceway Dents or Bumps (F_f)

Vibration in Axial Direction (F_{ft}) $nZ\,(F_r\text{-}F_a)$

Vibration in Radial Direction (F_{fr}) $F_{ft} \pm F_r$

Vibration caused by Ball Surface Dents or Bumps (Fg)

Vibration in Axial Direction (F_{gt}) $2nF_c$

Vibration in Radial Direction (F_{gr}) $F_{gt} \pm F_a$

D_w: Ball Diameter (mm)
D_{pw}: Pitch Circle Diameter (mm)
α_0: Nominal Contact Angle (°)
Z : Number of Balls
n: Integer Number from table on page 19
f_r: Inner Ring Rotation Speed (Hz)
F_r : Outer Ring Rotation Speed (Hz)

To simplify, $\cos\alpha_0 = 1$ could be used. The calculations below are examples.

Example 1:
When the inner ring of an R-1560X2ZZ bearing is rotated at 1,800 RPM, vibration caused by ball revolution (rotation about the bearing axis of rotation) is calculated as follows:

$$F_a = \frac{1}{2}\left(1-\frac{2.778}{10.5}\times 1\right)\times 30 = 11$$

Noise

Noise level is checked by an Anderon meter, which is explained below.

Anderon Meter

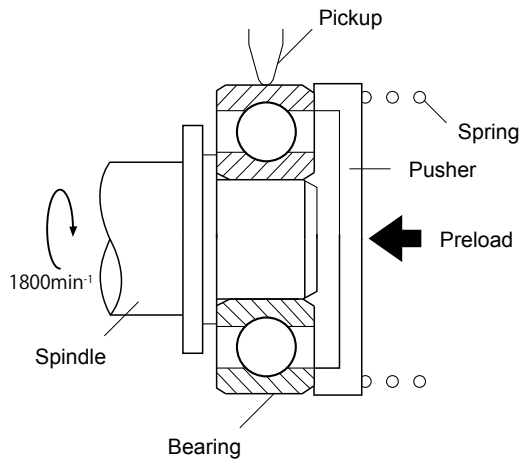

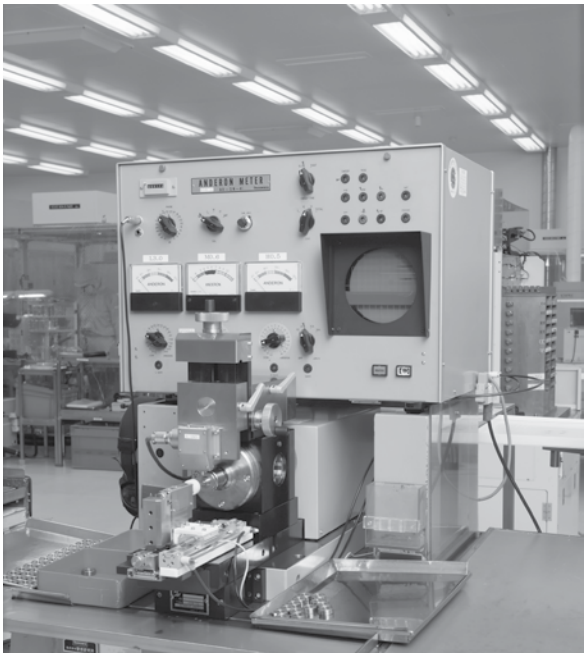

It is impossible to see the interior of the bearing once it is assembled. The noise levels of bearings must be checked when they are rotating. The Anderon meter checks the noise of assembled bearings and displays the noise level. In order to accurately perform the noise evaluation, the bearings are preloaded. The bearing's inner ring is rotated at 1,800 RPM and the outer ring is stationary during the measurement. Mechanical vibration of the bearings outer ring is detected in the radial direction by contacting the outer ring with a velocity sensor. The signal from the sensor is converted to a variable electrical output. It is possible to detect even small vibrations because a direct detection system is used instead of a system that converts from rotational vibrations to air vibrations. Vibration from other sources can be eliminated in this method.

The detected vibration is classified into three different frequency bands. The unit for the Anderon meter is referred to as the Anderon value.

Range	Frequency Range (Hz)
L : Low Band	50 ~ 300
M : Medium Band	300 ~ 1,800
H : High Band	1,800 ~ 10,000

Compatibility with Plastic Parts

Some plastics are susceptible to degradation and cracking due to the lubrication used in ball bearings. Minebea does chemical tests for plastics and grease compatibility.

Chemical Attack

Depending on the chemical compatibility, plastic parts such as housings in some application could be degraded by the grease inside the bearings or rust preventative oils on the exterior.

This phenomenon is called a chemical attack. A chemical attack can occur in some combinations of plastic materials and lubricants. There are many factors that affect the chemical attacks.

When some physical force is applied to the plastics, grease penetration can cause the chemical attacks.

Stress of Plastic Parts

Internal residual stress can occur within injection molded plastic parts. This can be relieved by a secondary process such as machining or ultra sonic adhesion. Although internal residual stress decreases slowly by gradual alleviation and annealing treatments, it is difficult to remove completely.

Oil and Grease

Ester is a common base oil of grease. Compared to other types of oil, chemical attacks occur in ester oil more often because it tends to penetrate plastics easily. Some types of oil such as Synthetic Hydrocarbon, Silicone, and Fluorinated resist oil penetration more effectively.

Weld Line

In injection molding, weld lines may reduce the mechanical strength of the part, leaving them vulnerable to penetration and chemical compatibility issues with the lubricant. Interference fit may also present issues at the weld lines.

Plastic Materials

While chemical attack tends to occur more in non-crystalline plastics (PS: Polyethylene, ABS, PC: Polycarbonate), crystalline plastics (PP: Polypropylene, PE: Polyethylene, POM: Polyacetal) have stronger resistance against chemical attack. Lubricants penetrate into intermolecular spaces more in non-crystalline plastics, and intermolecular bonding tends to break easily.

Plastic Compatibility

Plastic compatibility issues are less common if the internal stress is reduced and the appropriate grease is selected. Minebea has developed synthetic greases that provide improved resistance against plastic compatibility issues.

Lubricants

Lubricant selection has a strong impact on ball bearing performance. Bearing performance such as life, torque, rotation stability, and noise depends on lubricants even if the bearings use the same material and components.

Bearings are typically filled with either grease or oil. After the initial fill, the grease or oil is rarely changed or replenished. Generally, grease is standard in enclosure type bearings (bearings with seals or shields) because the life of grease is longer than that of oils.

Grease is composed of thickener and base oil. Fiber bonding and oil separation of the thickener plays an important role in grease. Fiber bonding keeps the oils in, and the oils are released gradually by oil separation. If only oils were filled in the bearings, they would tend to leak out of the bearing. The slow release of base oils due to oil separation makes longer lubrication life possible. When an application requires extremely low torque or torque fluctuations needs be minimized, oils are the preferred choice. This is because oils spread more than grease but greases are semi-solid and could add resistance against rotation. Grease performance may be enhanced by additives such as oxidation-resistant agents, lube agents (improving boundary lubrication), extreme pressure agents, and rust-inhibitor agents.

Lubricant Fill Amount

The standard lubricant fill amount for small and miniature size bearings is 25-35%. Grease fill amount varies in each application, and is specified as follows.

Lubricant Fill Amount

Fill Amount Symbols	Fill Amount
X	5 ~ 10%
L	10 ~ 15%
T	15 ~ 20%
No Code (Standard)	25 ~ 35%
H	40 ~ 50%
J	50 ~ 60%

Notes

Plastic Compatibility

Plastics are now used more frequently for assemblies using ball bearings due to the trends toward smaller and lighter devices. Unfavorable combinations of grease and plastics could result in a chemical reaction that degrades and cracks components.

When selecting lubrication, application conditions and environment need to be reviewed. Please refer to the Application Guide on the following page for details.

Conductivity

Conductive grease is available for specific applications. Conductive capability depends on the application conditions (Speed, Load, etc.). Please note that the grease life and conductivity life are not equivalent.

Table of Commonly Used Lubricant Types

Grease Type	Lithium Soap Grease			Urea Grease		Fluorinated Grease				Conductive Grease			Oil	
Thickener	Lithium Soap			Urea		PTFE				Carbon			-	
Base Oil	Ester			Syn-thetic Hydro-carbon	Ester	Fluorinated			Fluori-nated + Ester	Synthetic Hydrocarbon			Ester	Syn-thetic Hydro-carbon
NMB Code	LY121	LY72	LY552	LY551	LY532	LY500	LY586	LY699	LY655	LY727	LY707	LY722	LO1	LY650
Base Oil Viscosity [mm^2/S@40°C]	26	15	55	48	100	190	85	210	85	148	420	20	12	32
Worked Penetration*	250	275	240	225	255	280	280	280	280	235	263	263	-	-
Temperature Range** [°C]	-50 ~ +150	-50 ~ +150	-40 ~ +130	-40 ~ +200	-40 ~ +180	-50 ~ +260	-50 ~ +220	-40 ~ +200	-50 ~ +200	-40 ~ +125	-40 ~ +125	-40 ~ +125	-50 ~ +120	-40 ~ +130

Application Guide

NMB Code	LY121	LY72	LY552	LY551	LY532	LY500	LY586	LY699	LY655	LY727	LY707	LY722	LO1	LY650
Noise	BETTER	BETTER	BETTER	BETTER	FAIR	FAIR	GOOD	GOOD	FAIR	POOR	POOR	POOR	BETTER	BETTER
Torque	BETTER	BETTER	GOOD	GOOD	FAIR	FAIR	BETTER	BEST	FAIR	FAIR	POOR	FAIR	BETTER	BETTER
High Temperature	GOOD	FAIR	BETTER	BETTER	BETTER	BEST	BEST	BEST	BEST	BETTER	BEST	GOOD	FAIR	FAIR
Low Temperature	GOOD	BETTER	GOOD	GOOD	FAIR	FAIR	BETTER	BEST	FAIR	GOOD	GOOD	GOOD	BETTER	BETTER
High Speed	GOOD	FAIR	GOOD	BETTER	BETTER	FAIR	FAIR	FAIR	FAIR	FAIR	FAIR	FAIR	FAIR	FAIR
Plastic Compatability	POOR	POOR	POOR	BETTER	POOR	FAIR	-	-	BETTER	BETTER	-	-	POOR	BETTER
Cost Performance	BETTER	BETTER	GOOD	BETTER	GOOD	POOR	POOR	POOR	FAIR	FAIR	POOR	FAIR	FAIR	GOOD

* These values shown are typical.

**These ranges are based on the information given by each grease manufacturer.

Please note that they are not the specific temperature ranges for bearing application.

Handling of a Bearing

Ball bearings can be damaged from improper handling or installation. This may shorten the life due to noise, vibration, and heat generation. Careful handling is also required during shipping and storing. If adhesive needs to be used, please use it with a full understanding of its characteristics.

Ball bearings favor clean environments as they are very precise mechanical parts. Please maintain clean environments for their usage.

Installation of a Ball Bearing

There are many methods to install bearings onto shafts or into housings. The following are important for the installation process.

When bearings are assembled to either shafts or housings, by any fit methods, their centers must be aligned (Figure 2-28). If an interference fit is used, the pressing force has to be applied to either the inner ring or outer ring side face at a right angle. Apply the load slowly and continuously without the use of a shock or impact load.

Brinelling damage can occur when loads are applied in the wrong positions and/or when excessive loads due to misalignment are applied to the bearing during installation. If the bearing has enclosures, installation loads should not be applied to them.

Handling of Shafts and Housings

If shafts and housings are contaminated, bearing misalignment may occur during the installation (Figure 2-30). The same thing happens when the shaft and housing are scratched. If the bearing is pressed with these conditions, shafts and housings will be damaged further.

Since the inner and outer rings of ball bearings are very thin, the raceways will be affected easily by the shapes of shafts and housings when they are installed with interference fits. Inner and outer rings could be deformed easily, especially when shaft or housing roundness is poor. As a result, noise will increase and life will be shortened.

Shipping and Storing After Assembly

Bearing damage can occur even after installation. If the motor experiences a strong impact through the shaft, brinell damage can occur on the internal surfaces of the bearings. False brinell damage or fretting may also occur from vibration of the assembly.

Assembling with Adhesive

If adhesive is used for bearing installations, please note the following: Rust preventative oils on the outer surfaces of ball bearings need to be wiped away. Please use clean cloths saturated with alcohol. Avoid the use of excessive amounts of alcohol as it may result in migrations into the bearing along with contamination.

A list of common adhesives is shown below. Please select an adhesive after confirming characteristics with the adhesive manufacturer.

1. Liquid type:
   Anaerobic, heat cure, UV cure, visible light cure, etc.

2. Liquid combined type:
   Room temperature cure, heat cure, etc.

Adhesive amount should be minimized to prevent its ingress into the bearings. The anaerobic, UV and visible light type adhesives should be handled especially carefully because it is difficult to notice adhesive migration at the time of installation. Only the necessary amounts, as shown in Figure 2-31, should be applied. A shaft or housing groove for the adhesive is also effective.

Avoid exposing bearings to high temperature during the hardening process. Lower temperature is favorable for hardening. UV lighting devices could introduce excessive heat, so avoid using for long periods of time or under high power because some greases may migrate or degrade due to the temperature.

Cyanoacrylate adhesives could cause outgassing during hardening resulting in rotational issues.

Handling During Insertion

Figure 2-28

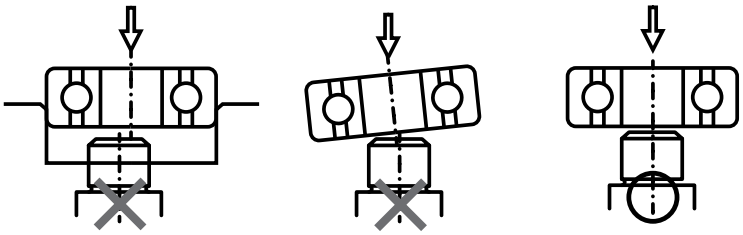

Load Position for Press Fit

Figure 2-29

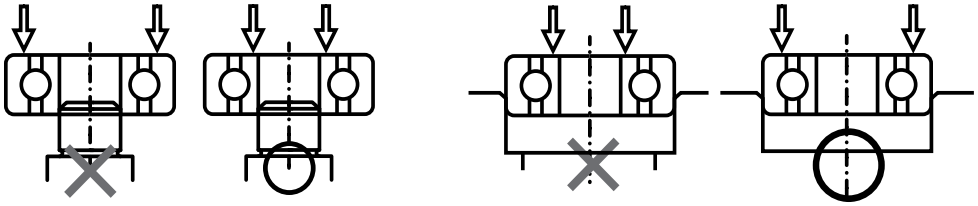

Misalignment Due to Contamination and Damage

Figure 2-30

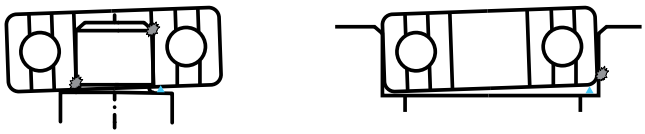

▲: Contamination, metal particles, etc
✹: Damage, dents

Applying Adhesive (Examples)

Figure 2-31

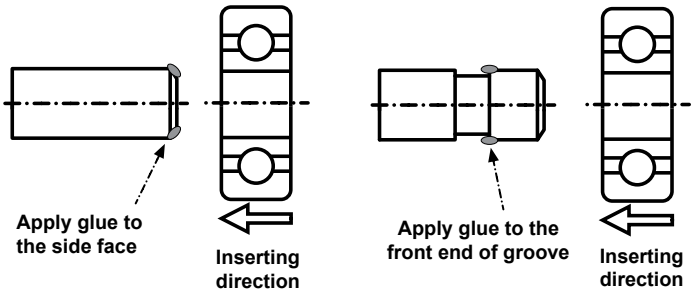

Deep Groove Radial Ball Bearings

R-Series & L-Series

Basic Dimension										NMB P/N **
Bore d		OD D		Width B				Chamfer r_s min		Open
				Open		Shielded				
mm	Inch	mm	Inch	mm	Inch	mm	Inch	mm	Inch	
1.0	0.0394	3.0	0.1181	1.0	0.0394	-	-	0.05	0.002	L-310
		4.0	0.1575	1.6	0.0630	-	-	0.10	0.004	R-410
1.2	0.0472	4.0	0.1575	1.8	0.0709	-	-	0.10	0.004	R-412
1.5	0.0591	4.0	0.1575	1.2	0.0472	-	-	0.05	0.002	L-415
		4.0	0.1575	-	-	2.0	0.0787	0.05	0.002	-
		5.0	0.1969	2.0	0.0787	2.6	0.1024	0.15	0.006	R-515
		6.0	0.2362	2.5	0.0984	3.0	0.1181	0.15	0.006	R-615
2.0	0.0787	5.0	0.1969	1.5	0.0591	2.3	0.0906	0.08	0.003	L-520
		5.0	0.1969	2.5	0.0984	2.5	0.0984	0.08	0.003	L-520W52
		6.0	0.2362	2.3	0.0906	-	-	0.15	0.006	R-620
		6.0	0.2362	-	-	3.0	0.1181	0.15	0.006	-
		6.0	0.2362	2.5	0.0984	-	-	0.15	0.006	R-620W52
		6.0	0.2362	-	-	2.5	0.0984	0.15	0.006	-
		7.0	0.2756	2.8	0.1102	3.5	0.1378	0.15	0.006	R-720
		7.0	0.2756	-	-	3.0	0.1181	0.15	0.006	-
2.5	0.0984	6.0	0.2362	1.8	0.0709	2.6	0.1024	0.08	0.003	L-625
		7.0	0.2756	2.5	0.0984	3.5	0.1378	0.15	0.006	R-725
		8.0	0.3150	2.8	0.1102	4.0	0.1575	0.15	0.006	R-825
3.0	0.1181	6.0	0.2362	2.0	0.0787	2.5	0.0984	0.08	0.003	L-630
		7.0	0.2756	2.0	0.0787	3.0	0.1181	0.10	0.004	L-730
		8.0	0.3150	3.0	0.1181	4.0	0.1575	0.15	0.006	R-830
		9.0	0.3543	3.0	0.1181	5.0	0.1969	0.15	0.006	R-930
		9.0	0.3543	2.5	0.0984	-	-	0.15	0.006	R-930Y52
		9.0	0.3543	-	-	4.0	0.1575	0.15	0.006	-
		10.0	0.3937	4.0	0.1575	4.0	0.1575	0.15	0.006	R-1030
4.0	0.1575	7.0	0.2756	2.0	0.0787	2.5	0.0984	0.08	0.003	L-740
		8.0	0.3150	2.0	0.0787	3.0	0.1181	0.10	0.004	L-840
		9.0	0.3543	2.5	0.0984	4.0	0.1575	0.10	0.004	L-940
		10.0	0.3937	3.0	0.1181	4.0	0.1575	0.15	0.006	L-1040X2
		11.0	0.4331	4.0	0.1575	4.0	0.1575	0.15	0.006	R-1140
		12.0	0.4724	4.0	0.1575	4.0	0.1575	0.20	0.008	R-1240
		13.0	0.5118	5.0	0.1969	5.0	0.1969	0.20	0.008	R-1340
		16.0	0.6299	5.0	0.1969	5.0	0.1969	0.30	0.012	R-1640

NMB P/N **		ISO/JIS P/N*	Reference Diameter (mm)				Ball		Basic Load Rating	
Shielded	Sealed		Open		Shield Seal		Size D_W	No. Z	Dynamic C_r (1)	Static C_{or} (2)
			OR L_o	IR L_i	OR L_o	IR L_i				
			mm	mm	mm	mm	mm		N	N
-	-	681	2.41	1.60	-	-	0.5000	7	80	23
-	-	691	3.16	2.05	-	-	0.7938	6	158	44
-	-	-	3.16	2.05	-	-	0.7938	6	158	44
-	-	68/1.5	3.25	2.26	-	-	0.6350	7	125	38
L-415X5ZZ	-	68/1.5	-	-	3.42	2.15	0.6000	7	113	34
R-515ZZ	-	69/1.5	3.73	2.60	4.03	2.60	0.7938	7	184	57
R-615ZZ	-	60/1.5	4.73	2.90	5.06	2.90	1.1906	6	324	97
L-520ZZ	-	682	4.00	2.90	4.28	2.90	0.7938	7	187	59
L-520ZZW52	-	-	4.00	2.90	4.28	2.90	0.7938	7	187	59
-	-	692	4.78	3.16	-	-	1.0000	7	279	89
R-620ZZ	-	692	-	-	5.23	3.10	1.1906	6	330	99
-	-	-	4.93	3.10	-	-	1.1906	6	330	99
R-620ZZY52	-	-	-	-	5.23	3.10	1.1906	6	330	99
R-720ZZ	-	602	5.52	3.80	5.93	3.80	1.1906	7	380	126
R-720ZZY03	-	-	-	-	5.93	3.80	1.1906	7	380	126
L-625ZZ	-	68/2.5	4.93	3.80	5.23	3.80	0.7938	8	206	73
R-725ZZ	-	69/2.5	5.52	3.80	5.93	3.80	1.1906	7	380	126
R-825ZZ	-	60/2.5	6.53	4.10	7.19	4.10	1.5875	6	553	176
L-630ZZ	-	673	4.93	3.80	5.23	3.80	0.7938	8	206	73
L-730ZZ	-	683	5.83	4.10	6.13	4.10	1.1906	7	384	129
R-830ZZ	-	693	6.53	4.10	7.19	4.10	1.5875	6	553	176
R-930ZZ	-	603	7.23	4.80	7.64	4.80	1.5875	7	634	219
-	-	-	7.23	4.80	-	-	1.5875	7	634	219
R-930ZZY04	-	-	-	-	7.64	4.80	1.5875	7	634	219
R-1030ZZ	-	623	8.20	5.08	8.20	5.08	1.5875	7	641	226
L-740ZZ	-	674	5.93	4.80	6.33	4.80	0.7938	11	252	106
L-840ZZ	-	-	6.93	5.20	7.24	5.20	1.1906	7	391	140
L-940ZZ	-	684	7.48	5.20	7.93	5.20	1.5875	7	641	226
L-1040X2ZZ	-	-	7.96	5.80	8.50	5.46	1.5875	8	708	266
R-1140ZZ	-	694	9.54	6.40	9.54	6.40	1.5875	8	714	276
R-1240KK1	-	604	9.99	5.62	9.68	5.62	2.0000	7	959	347
R-1340KK	DD	624	11.22	5.97	11.22	5.97	2.3813	7	1306	487
R-1640HH	DD	634	13.41	7.80	13.41	7.80	2.7781	7	1735	671

Please consult with NMB Application Engineering for bearing selection.

*Only open type is shown.

**Column shows the availabilities and types.

(1) Based on JIS B 1518

(2) Based on JIS B 1519

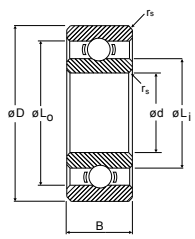

Radial Open Ball Bearings

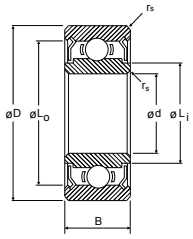

Radial Shielded Ball Bearings

Deep Groove Radial Ball Bearings *(continued)*

R-Series & L-Series

Basic Dimension										NMB P/N **
Bore d		OD D		Width B				Chamfer r_s min		Open
				Open		Shielded				
mm	Inch	mm	Inch	mm	Inch	mm	Inch	mm	Inch	
5.0	0.1969	8.0	0.3150	2.0	0.0787	2.5	0.0984	0.08	0.003	L-850
		9.0	0.3543	2.5	0.0984	3.0	0.1181	0.10	0.004	L-950
		10.0	0.3937	3.0	0.1181	4.0	0.1575	0.10	0.004	L-1050
		11.0	0.4331	3.0	0.1181	5.0	0.1969	0.15	0.006	L-1150
		11.0	0.4331	-	-	4.0	0.1575	0.15	0.006	-
		13.0	0.5118	4.0	0.1575	4.0	0.1575	0.20	0.008	R-1350
		14.0	0.5512	5.0	0.1969	5.0	0.1969	0.20	0.008	R-1450
		16.0	0.6299	5.0	0.1969	5.0	0.1969	0.30	0.012	R-1650
		19.0	0.7480	6.0	0.2362	6.0	0.2362	0.30	0.012	R-1950
6.0	0.2362	10.0	0.3937	2.5	0.0984	3.0	0.1181	0.10	0.004	L-1060
		12.0	0.4724	3.0	0.1181	4.0	0.1575	0.15	0.006	L-1260
		13.0	0.5118	3.5	0.1378	5.0	0.1969	0.15	0.006	L-1360
		15.0	0.5906	5.0	0.1969	5.0	0.1969	0.20	0.008	R-1560X2
		16.0	0.6299	-	-	5.0	0.1969	0.30	0.012	-
		17.0	0.6693	6.0	0.2362	6.0	0.2362	0.30	0.012	R-1760X2
		19.0	0.7480	6.0	0.2362	6.0	0.2362	0.30	0.012	R-1960
7.0	0.2756	11.0	0.4331	2.5	0.0984	3.0	0.1181	0.10	0.004	L-1170
		13.0	0.5118	3.0	0.1181	4.0	0.1575	0.15	0.006	L-1370
		14.0	0.5512	3.5	0.1378	5.0	0.1969	0.15	0.006	L-1470
		19.0	0.7480	6.0	0.2362	6.0	0.2362	0.30	0.012	R-1970
		22.0	0.8661	7.0	0.2756	7.0	0.2756	0.30	0.012	R-2270
8.0	0.3150	12.0	0.4724	2.5	0.0984	3.5	0.1378	0.10	0.004	L-1280
		14.0	0.5512	3.5	0.1378	4.0	0.1575	0.15	0.006	L-1480
		16.0	0.6299	4.0	0.1575	5.0	0.1969	0.20	0.008	L-1680
		19.0	0.7480	6.0	0.2362	6.0	0.2362	0.30	0.012	R-1980
		22.0	0.8661	7.0	0.2756	7.0	0.2756	0.30	0.012	R-2280
		24.0	0.9449	-	-	8.0	0.3150	0.30	0.012	-
9.0	0.3543	17.0	0.6693	4.0	0.1575	5.0	0.1969	0.20	0.008	L-1790
		20.0	0.7874	6.0	0.2362	6.0	0.2362	0.30	0.012	L-2090
10.0	0.3937	19.0	0.7480	5.0	0.1969	7.0	0.2756	0.30	0.012	L-1910
		19.0	0.7480	-	-	5.0	0.1969	0.30	0.012	-
		22.0	0.8661	6.0	0.2362	6.0	0.2362	0.30	0.012	R-2210X3
12.0	0.4724	21.0	0.8268	5.0	0.1969	5.0	0.1969	0.30	0.012	L-2112
		24.0	0.9449	6.0	0.2362	6.0	0.2362	0.30	0.012	R-2412X3

NMB P/N **		ISO/JIS P/N*	Reference Diameter				Ball		Basic Load Rating	
Shielded	Sealed		Open		Shield Seal		Size D_w	No. Z	DYN C_r (1)	Static C_{or} (2)
			OR L_o	IR L_i	OR L_o	IR L_i				
			mm	mm	mm	mm	mm		N	N
L-850ZZ	-	675	6.95	5.80	7.26	5.80	0.7938	13	274	130
L-950ZZ	-	-	7.73	6.00	8.04	6.00	1.1906	10	495	207
L-1050ZZ	SS	-	8.63	6.40	8.94	6.40	1.5875	8	714	276
L-1150ZZ	-	685	8.63	6.40	9.54	6.40	1.5875	8	714	276
L-1150ZZY04	-	-	-	-	9.54	6.40	1.5875	8	714	276
R-1350ZZ	DD	695	11.14	6.66	11.14	6.66	2.0000	8	1074	422
R-1450ZZ	-	605	12.14	6.88	12.14	6.88	2.3813	7	1329	508
R-1650HH	DD SS	625	12.50	7.80	13.41	7.80	2.7781	7	1735	671
R-1950ZZ	-	635	15.63	8.67	16.26	8.67	3.9688	6	2805	1060
L-1060ZZ	DD SS	676	8.73	6.95	9.04	6.95	1.1906	9	457	194
L-1260ZZ	DD SS	-	9.94	7.70	10.48	7.70	1.5875	10	831	363
L-1360ZZ	DD SS	686	10.98	8.00	11.44	7.33	2.0000	8	1083	438
R-1560X13KK	DD	696	13.20	7.80	13.20	7.80	2.7781	7	1735	671
R-1660HH	DD	-	-	-	13.41	7.80	2.7781	7	1735	671
R-1760X2ZZ	-	606	14.70	8.22	14.70	8.22	3.5000	6	2265	839
R-1960ZZ	DD	626	15.63	8.67	16.26	8.67	3.9688	6	2805	1060
L-1170ZZ	-	677	9.83	8.10	10.14	8.10	1.1906	9	449	199
L-1370ZZ	-	-	11.13	8.90	11.54	8.43	1.5875	11	880	414
L-1470KK	-	687	12.03	9.00	12.88	9.00	2.0000	9	1175	511
R-1970ZZ	-	607	16.24	9.55	16.24	9.55	3.1750	7	2240	912
R-2270HH	-	627	19.07	10.80	19.07	10.80	3.9688	7	3297	1368
L-1280ZZ	-	678	10.93	9.10	11.24	9.10	1.1906	11	506	249
L-1480ZZ	SS	-	12.13	9.90	12.55	9.90	1.5875	10	819	386
L-1680KK	DD	688	13.40	10.30	14.18	9.68	2.3813	9	1606	712
R-1980KK	DD SS	698	16.68	10.60	16.68	10.60	3.1750	8	2463	1059
R-2280HH	DD	608	19.07	10.80	19.07	10.80	3.9688	7	3297	1368
R-2480KK	-	628	-	-	19.10	11.80	3.9688	7	3297	1368
L-1790ZZ	DD	689	14.84	11.20	15.34	11.20	2.3813	10	1724	813
L-2090KK	-	699	16.71	12.32	17.44	12.32	2.7781	9	2123	985
L-1910ZZ	DD	6800	16.71	12.32	17.44	12.32	2.7781	9	2123	985
L-1910KKY05	DD	-	-	-	17.44	12.32	2.7781	9	2123	985
R-2210X3KK	DD SS	6900	19.40	13.40	19.40	13.40	3.1750	9	2697	1273
L-2112KK	DD SS	6801	19.22	14.40	19.22	14.40	2.3813	12	1917	1042
R-2412X3KK	DD	6901	21.69	14.28	21.69	14.28	3.5719	8	3082	1433

Please consult with NMB Application Engineering for bearing selection.

*Only open type is shown.

**Column shows the availabilities and types.

(1) Based on JIS B 1518

(2) Based on JIS B 1519

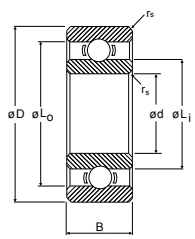

Radial Open Ball Bearings

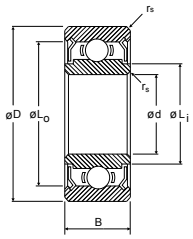

Radial Shielded Ball Bearings

Deep Groove Flanged Radial Ball Bearings

RF-Series & LF-Series

Basic Dimension													
Bore d		OD D		Width B				Chamfer r_s min		Flange			
				Open		Shielded				Open		Shielded	
										OD D_1	Width C_1	OD D_1	Width C_1
mm	Inch	mm	Inch	mm	Inch	mm	Inch	mm	Inch	mm	mm	mm	mm
1.0	0.0394	3.0	0.1181	1.0	0.0394	-	-	0.05	0.002	3.80	0.30	3.80	-
1.5	0.0591	4.0	0.1575	1.2	0.0472	2.0	0.0787	0.05	0.002	5.00	0.40	5.00	0.60
		5.0	0.1969	2.0	0.0787	2.6	0.1024	0.15	0.006	6.50	0.60	6.50	0.80
		6.0	0.2362	2.5	0.0984	3.0	0.1181	0.15	0.006	7.50	0.60	7.50	0.80
2.0	0.0787	5.0	0.1969	1.5	0.0591	2.3	0.0906	0.08	0.003	6.10	0.50	6.10	0.60
		6.0	0.2362	2.3	0.0906	3.0	0.1181	0.15	0.006	7.50	0.60	7.50	0.80
		7.0	0.2756	2.8	0.1102	3.5	0.1378	0.15	0.006	8.50	0.70	8.50	0.90
2.5	0.0984	6.0	0.2362	1.8	0.0709	2.6	0.1024	0.08	0.003	7.10	0.50	7.10	0.80
		7.0	0.2756	2.5	0.0984	3.5	0.1378	0.15	0.006	8.50	0.70	8.50	0.90
		8.0	0.3150	2.8	0.1102	4.0	0.1575	0.15	0.006	9.50	0.70	9.50	0.90
3.0	0.1181	6.0	0.2362	2.0	0.0787	2.5	0.0984	0.08	0.003	7.20	0.60	7.20	0.60
		7.0	0.2756	2.0	0.0787	3.0	0.1181	0.10	0.004	8.10	0.50	8.10	0.80
		8.0	0.3150	3.0	0.1181	4.0	0.1575	0.15	0.006	9.50	0.70	9.50	0.90
		9.0	0.3543	3.0	0.1181	5.0	0.1969	0.15	0.006	10.50	0.70	10.50	1.00
		9.0	0.3543	-	-	4.0	0.1575	0.15	0.006	10.60	-	10.60	0.80
		10.0	0.3937	4.0	0.1575	4.0	0.1575	0.15	0.006	11.50	1.00	11.50	1.00
4.0	0.1575	7.0	0.2756	2.0	0.0787	2.5	0.0984	0.08	0.003	8.20	0.60	8.20	0.60
		8.0	0.3150	2.0	0.0787	3.0	0.1181	0.10	0.004	9.20	0.60	9.20	0.60
		9.0	0.3543	2.5	0.0984	4.0	0.1575	0.10	0.004	10.30	0.60	10.30	1.00
		10.0	0.3937	3.0	0.1181	4.0	0.1575	0.15	0.006	11.60	0.60	11.60	0.80
		11.0	0.4331	4.0	0.1575	4.0	0.1575	0.15	0.006	12.50	1.00	12.50	1.00
		12.0	0.4724	4.0	0.1575	4.0	0.1575	0.20	0.008	13.50	1.00	13.50	1.00
		13.0	0.5118	5.0	0.1969	5.0	0.1969	0.20	0.008	15.00	1.00	15.00	1.00
		16.0	0.6299	5.0	0.1969	5.0	0.1969	0.30	0.012	18.00	1.00	18.00	1.00
5.0	0.1969	8.0	0.3150	2.0	0.0787	2.5	0.0984	0.08	0.003	9.20	0.60	9.20	0.60
		9.0	0.3543	2.5	0.0984	3.0	0.1181	0.10	0.004	10.20	0.60	10.20	0.60
		10.0	0.3937	3.0	0.1181	4.0	0.1575	0.10	0.004	11.20	0.60	11.60	0.80
		11.0	0.4331	3.0	0.1181	5.0	0.1969	0.15	0.006	12.50	0.80	12.50	1.00
		13.0	0.5118	4.0	0.1575	4.0	0.1575	0.20	0.008	15.00	1.00	15.00	1.00
		14.0	0.5512	5.0	0.1969	5.0	0.1969	0.20	0.008	16.00	1.00	16.00	1.00
		16.0	0.6299	5.0	0.1969	5.0	0.1969	0.30	0.012	18.00	1.00	18.00	1.00
		19.0	0.7480	6.0	0.2362	6.0	0.2362	0.30	0.012	22.00	1.50	22.00	1.50

NMB P/N**			ISO/JIS P/N*	Reference Diameter				Ball		Basic Load Rating	
				Open		Shield/Seal		Size D_W	No. Z	DYN C_r (1)	Static C_{or} (2)
Open	Shielded	Sealed		OR L_o	IR L_i	OR L_o	IR L_i				
				mm	mm	mm	mm	mm		N	N
LF-310	-	-	F681	2.41	1.60	-	-	0.5000	7	80	23
LF-415	LF-415ZZ	-	F68/1.5	3.24	2.26	3.49	2.26	0.6350	7	125	38
RF-515	RF-515ZZ	-	F69/1.5	3.73	2.60	4.03	2.60	0.7938	7	184	57
RF-615	RF-615ZZ	-	F60/1.5	4.73	2.90	5.06	2.90	1.1906	6	324	97
LF-520	LF-520ZZ	-	F682	4.00	2.90	4.28	2.90	0.7938	7	187	59
RF-620	RF-620ZZ	-	F692	4.75	3.16	5.23	3.10	1.1906	6	330	99
RF-720	RF-720ZZ	-	F602	5.52	3.80	5.93	3.80	1.1906	7	380	126
LF-625	LF-625ZZ	-	F68/2.5	4.93	3.80	5.23	3.80	0.7938	8	206	73
RF-725	RF-725ZZ	-	F69/2.5	5.52	3.80	5.93	3.80	1.1906	7	380	126
RF-825	RF-825ZZ	-	F60/2.5	6.53	4.10	7.19	4.10	1.5875	6	553	176
LF-630	LF-630ZZ	-	-	4.93	3.80	5.23	3.80	0.7938	8	206	73
LF-730	LF-730ZZ	-	F683	5.83	4.10	6.13	4.10	1.1906	7	384	129
RF-830	RF-830ZZ	-	F693	6.53	4.10	7.19	4.10	1.5875	6	553	176
RF-930	RF-930ZZ	-	F603	7.23	4.80	7.64	4.80	1.5875	7	634	219
-	RF-930ZZY04	-	-	-	-	7.64	4.80	1.5875	7	634	219
RF-1030	RF-1030ZZ	-	F623	8.20	5.08	8.20	5.08	1.5875	7	641	226
LF-740	LF-740ZZ	-	-	5.93	4.80	6.33	4.80	0.7938	11	252	106
LF-840	LF-840ZZ	-	-	6.93	5.20	7.24	5.20	1.1906	7	391	140
LF-940	LF-940ZZ	-	F684	7.48	5.20	7.93	5.20	1.5875	7	641	226
LF-1040	LF-1040ZZ	-	-	7.96	5.80	8.50	5.46	1.5875	8	708	266
RF-1140	RF-1140ZZ	-	F694	9.54	6.40	9.54	6.40	1.5875	8	714	276
RF-1240	RF-1240ZZ	-	F604	9.99	5.62	9.99	5.62	2.0000	7	959	347
RF-1340	RF-1340HH	-	F624	11.04	7.00	11.04	7.00	2.3813	7	1306	487
RF-1640	RF-1640ZZ	-	F634	13.41	7.80	13.20	7.80	2.7781	7	1735	671
LF-850	LF-850ZZ	-	F675	6.95	5.80	7.26	5.80	0.7938	13	274	130
LF-950	LF-950ZZ	-	-	7.73	6.00	8.04	6.00	1.1906	10	495	207
LF-1050	LF-1050ZZ	-	-	8.63	6.40	8.94	6.40	1.5875	8	714	276
LF-1150	LF-1150ZZ	-	F685	8.63	6.40	9.54	6.40	1.5875	8	714	276
RF-1350	RF-1350ZZ	-	F695	11.14	6.66	11.14	6.66	2.0000	8	1074	422
RF-1450	RF-1450ZZ	-	F605	12.14	6.88	12.14	6.88	2.3813	7	1329	508
RF-1650	RF-1650HH	-	F625	13.41	7.80	13.41	7.80	2.7781	7	1735	671
RF-1950	RF-1950ZZ	-	F635	15.60	8.67	16.26	8.67	3.9688	6	2805	1060

Stainless Steel material is standard for the flanged bearings.
Please consult with NMB Application Engineering for bearing selection.
*Only open type is shown.
**Column shows the availabilities and types.

(1) Based on JIS B 1518
(2) Based on JIS B 1519

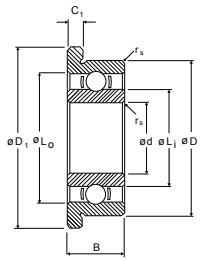

Radial Flanged Open Ball Bearings

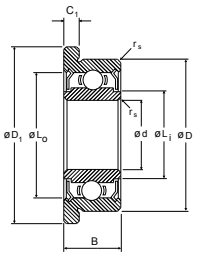

Radial Flanged Shielded Ball Bearings

Deep Groove Flanged Radial Ball Bearings *(continued)*

RF-Series & LF-Series

Basic Dimension													
Bore d		OD D		Width B				Chamfer r_s min		Flange			
				Open		Shielded				Open		Shielded	
										OD D_1	Width C_1	OD D_1	Width C_1
mm	Inch	mm	Inch	mm	Inch	mm	Inch	mm	Inch	mm	mm	mm	mm
6.0	0.2362	10.0	0.3937	2.5	0.0984	3.0	0.1181	0.10	0.004	11.20	0.60	11.20	0.60
		12.0	0.4724	3.0	0.1181	4.0	0.1575	0.15	0.006	13.20	0.60	13.60	0.80
		13.0	0.5118	3.5	0.1378	5.0	0.1969	0.15	0.006	15.00	1.00	15.00	1.10
		15.0	0.5906	5.0	0.1969	5.0	0.1969	0.20	0.008	17.00	1.20	17.00	1.20
		17.0	0.6693	6.0	0.2362	6.0	0.2362	0.30	0.012	19.00	1.20	19.00	1.20
		19.0	0.7480	6.0	0.2362	6.0	0.2362	0.30	0.012	22.00	1.50	22.00	1.50
7.0	0.2756	11.0	0.4331	2.5	0.0984	3.0	0.1181	0.10	0.004	12.20	0.60	12.20	0.60
		13.0	0.5118	3.0	0.1181	4.0	0.1575	0.15	0.006	14.20	0.60	14.60	0.80
		14.0	0.5512	3.5	0.1378	5.0	0.1969	0.15	0.006	16.00	1.00	16.00	1.10
		19.0	0.7480	-	-	6.0	0.2362	0.30	0.012	-	-	22.00	1.50
		22.0	0.8661	7.0	0.2756	7.0	0.2756	0.30	0.012	25.00	1.50	25.00	1.50
8.0	0.3150	12.0	0.4724	2.5	0.0984	3.5	0.1378	0.10	0.004	13.20	0.60	13.60	0.80
		14.0	0.5512	3.5	0.1378	4.0	0.1575	0.15	0.006	15.60	0.80	15.60	0.80
		16.0	0.6299	4.0	0.1575	5.0	0.1969	0.20	0.008	18.00	1.00	18.00	1.10
		19.0	0.7480	6.0	0.2362	6.0	0.2362	0.30	0.012	22.00	1.50	22.00	1.50
		22.0	0.8661	7.0	0.2756	7.0	0.2756	0.30	0.012	25.00	1.50	25.00	1.50
9.0	0.3543	17.0	0.6693	4.0	0.1575	5.0	0.1969	0.20	0.008	19.00	1.00	19.00	1.10
10.0	0.3937	19.0	0.7480	-	-	7.0	0.2756	0.30	0.012	-	-	22.00	1.50
		22.0	0.8661	-	-	6.0	0.2362	0.30	0.012	-	-	25.00	1.50

NMB P/N**			ISO/JIS P/N*	Reference Diameter				Ball		Basic Load Rating	
				Open		Shield/Seal					
Open	Shielded	Sealed		OR L_o	IR L_i	OR L_o	IR L_i	Size D_w	No. Z	DYN C_r (1)	Static C_{or} (2)
				mm	mm	mm	mm	mm		N	N
LF-1060	LF-1060ZZ	-	-	8.73	6.95	9.04	6.95	1.1906	9	457	194
LF-1260	LF-1260ZZ	-	-	9.94	7.70	10.48	7.70	1.5875	10	831	363
LF-1360	LF-1360ZZ	-	F686	10.98	8.00	11.44	7.33	2.0000	8	1083	438
RF-1560	RF-1560ZZ	DD	F696	13.20	7.80	13.20	7.80	2.7781	7	1735	671
RF-1760X2	RF-1760X2ZZ	-	F606	14.70	8.22	14.70	8.22	3.5000	6	2265	839
RF-1960	RF-1960ZZ	-	F626	16.26	8.67	16.26	8.67	3.9688	6	2805	1060
LF-1170	LF-1170ZZ	-	-	9.83	8.10	10.14	8.10	1.1906	9	449	199
LF-1370	LF-1370ZZ	-	-	11.13	8.90	11.54	8.43	1.5875	11	880	414
LF-1470	LF-1470ZZ	-	F687	12.03	9.00	12.45	9.00	2.0000	9	1175	511
-	RF-1970ZZ	DD	F607	-	-	16.24	9.55	3.1750	7	2240	912
RF-2270	RF-2270HH	-	F627	19.07	10.80	19.07	10.80	3.9688	7	3297	1368
LF-1280	LF-1280ZZ	-	-	10.93	9.10	11.24	9.10	1.1906	11	506	249
LF-1480	LF-1480ZZ	DD	-	12.13	9.90	12.55	9.90	1.5875	10	819	386
LF-1680	LF-1680HH	DD	F688	13.40	10.30	14.18	9.68	2.3813	9	1606	712
RF-1980	RF-1980ZZ	DD	F698	16.24	9.55	16.24	9.55	3.1750	7	2240	912
RF-2280	RF-2280HH	-	F608	18.89	10.80	19.07	10.80	3.9688	7	3297	1368
LF-1790	LF-1790ZZ	-	F689	14.81	11.20	15.34	11.20	2.3813	10	1724	813
-	LF-1910ZZ	-	F6800	-	-	17.44	12.32	2.7781	9	2123	985
-	RF-2210X2HH	-	F6900	-	-	19.08	12.40	3.1750	9	2697	1273

Stainless Steel material is standard for the flanged bearings.
Please consult with NMB Application Engineering for bearing selection.
*Only open type is shown.
**Column shows the availabilities and types.

(1) Based on JIS B 1518
(2) Based on JIS B 1519

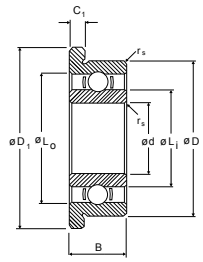

Radial Flanged Open Ball Bearings

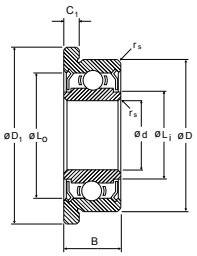

Radial Flanged Shielded Ball Bearings

Deep Groove Radial Ball Bearings

JIS Series

Basic Dimension								NMB P/N (3)**	
Bore d		OD D		Width B		Chamfer r_s min		Open	Shielded
mm	Inch	mm	Inch	mm	Inch	mm	Inch		
5.0	0.1969	19.0	0.7480	6.0	0.2362	0.30	0.012	635	635ZZ
6.0	0.2362	19.0	0.7480	6.0	0.2362	0.30	0.012	626	626ZZ
7.0	0.2756	19.0	0.7480	6.0	0.2362	0.30	0.012	607	607ZZ
		22.0	0.8661	7.0	0.2756	0.30	0.012	627	627ZZ
8.0	0.3150	22.0	0.8661	7.0	0.2756	0.30	0.012	608	608ZZ
9.0	0.3543	24.0	0.9449	7.0	0.2756	0.30	0.012	609	609ZZ
		26.0	1.0236	8.0	0.3150	0.30	0.012	629	629ZZ
10.0	0.3937	26.0	1.0236	8.0	0.3150	0.30	0.012	6000	6000ZZ

NR Type

Basic Dimension									
Bore d		OD D		Width B		Chamfer r_s min		NR Ring (3)	
mm	Inch	mm	Inch	mm	Inch	mm	Inch	OD D_2	Position C_2
6.0	0.2362	13.0	0.5118	5.0	0.1969	0.15	0.006	14.50	1.10
		15.0	0.5906	5.0	0.1969	0.20	0.008	17.20	1.50
		17.0	0.6693	6.0	0.2362	0.30	0.012	19.20	1.20
		19.0	0.7480	6.0	0.2362	0.30	0.012	22.10	1.50
7.0	0.2756	19.0	0.7480	6.0	0.2362	0.30	0.012	22.10	1.50
8.0	0.3150	16.0	0.6299	5.0	0.1969	0.20	0.008	18.20	0.95
		22.0	0.8661	7.0	0.2756	0.30	0.012	25.10	2.30
10.0	0.3937	22.0	0.8661	6.0	0.2362	0.30	0.012	24.70	1.62
		26.0	1.0236	8.0	0.3150	0.30	0.012	29.20	2.31

NMB P/N**	ISO/JIS P/N*	Reference Diameter		Ball		Basic Load Rating	
Sealed		OR L_o	IR L_i	Size D_w	No. Z	DYN C_r (1)	Static C_{or} (2)
		mm	mm	mm		N	N
DD	635	16.68	9.20	3.5000	7	2614	1053
DD SS	626	16.68	9.20	3.5000	7	2614	1053
DD SS	607	16.68	9.20	3.5000	7	2614	1053
DD SS	627	19.10	10.80	3.9688	7	3297	1368
DD SS	608	19.10	10.80	3.9688	7	3297	1368
DD SS	609	19.10	12.40	3.9688	7	3297	1368
DD SS	629	22.80	12.88	4.7625	7	4578	1970
DD SS	6000	22.80	13.75	4.7625	7	4578	1970

Please consult with NMB Application Engineering for bearing selection.
*Only open type is shown.
**Column shows the availabilities and types.

(1) Based on JIS B 1518
(2) Based on JIS B 1519
(3) Column refers to the term specified in JIS B 1513

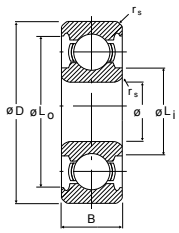

Radial Open Ball Bearings

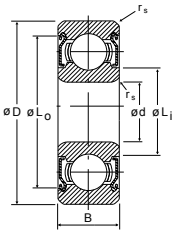

Radial Shielded Ball Bearings

NMB P/N**	ISO/JIS P/N	Reference Diameter		Ball		Basic Load Rating	
Shielded		OR L_o	IR L_i	Size D_w	No. Z	DYN C_r (1)	Static C_{or} (2)
		mm	mm	mm		N	N
LNR-1360X3ZZ	686ZZNR	10.48	7.70	1.5875	10	831	363
RNR-1560ZZ	696ZZNR	13.20	7.80	2.7781	7	1735	671
RNR-1760X2ZZ	606ZZNR	14.70	8.22	3.5000	6	2265	839
626ZZNR	626ZZNR	16.68	9.20	3.5000	7	2614	1053
607ZZNR	607ZZNR	16.68	9.20	3.5000	7	2614	1053
LNR-1680KK	688ZZNR	14.18	9.68	2.3813	9	1606	712
608ZZNRSD06	-	19.10	10.80	3.9688	7	3297	1368
RNR-2210X9KK	-	19.40	13.40	3.1750	9	2697	1273
6000ZZNR	-	22.88	13.75	4.7625	7	4578	1970

Please consult with NMB Application Engineering for bearing selection.

(1) Based on JIS B 1518
(2) Based on JIS B 1519
(3) There is a case that the dimensions are different than JIS B 1509.

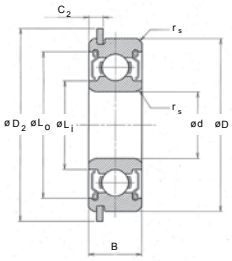

Radial Shielded Ball Bearings

Deep Groove Radial Ball Bearings

RI-Series & R-Series (inch)

Basic Dimension										NMB P/N *
Bore d		OD D		Width B				Chamfer r_s min		Open
				Open		Shielded				
Inch	mm	Inch	mm	Inch	mm	Inch	mm	Inch	mm	
0.0400	1.016	0.1250	3.175	0.0469	1.191	-	-	0.003	0.08	RI-2X2
0.0469	1.191	0.1562	3.967	0.0625	1.588	0.0937	2.380	0.003	0.08	RI-21/2
0.0550	1.397	0.1875	4.762	0.0781	1.984	0.1094	2.779	0.003	0.08	RI-3
0.0781	1.984	0.2500	6.350	0.0937	2.380	0.1406	3.571	0.003	0.08	RI-4
0.0937	2.380	0.1875	4.762	0.0625	1.588	0.0937	2.380	0.003	0.08	RI-3332
		0.3125	7.938	0.1094	2.779	0.1406	3.571	0.003	0.08	RI-5
0.1250	3.175	0.2500	6.350	0.0937	2.380	0.1094	2.779	0.003	0.08	RI-418
		0.3125	7.938	0.1094	2.779	0.1406	3.571	0.003	0.08	RI-518
		0.3750	9.525	0.1562	3.967	0.1562	3.967	0.012	0.30	R-2
		0.3750	9.525	0.1094	2.779	0.1406	3.571	0.005	0.13	RI-618
0.1562	3.967	0.3125	7.938	0.1094	2.779	0.1250	3.175	0.003	0.08	RI-5532
0.1875	4.762	0.3125	7.938	0.1094	2.779	0.1250	3.175	0.003	0.08	RI-5632
		0.3750	9.525	0.1250	3.175	0.1250	3.175	0.003	0.08	RI-6632
		0.5000	12.700	0.1562	3.967	0.1960	4.978	0.012	0.30	R-3
0.2500	6.350	0.3750	9.525	0.1250	3.175	0.1250	3.175	0.003	0.08	RI-614
		0.5000	12.700	0.1250	3.175	0.1875	4.762	0.005	0.13	RI-814
		0.6250	15.875	0.1960	4.978	0.1960	4.978	0.012	0.30	R-4
		0.7500	19.050	0.2188	5.558	0.2812	7.142	0.016	0.41	RI-1214
0.3125	7.938	0.5000	12.700	0.1562	3.967	0.1562	3.967	0.005	0.13	RI-8516
0.3750	9.525	0.8750	22.225	0.2188	5.558	0.2812	7.142	0.016	0.41	RI-1438
0.5000	12.700	1.1250	28.575	0.2500	6.350	0.3125	7.938	0.016	0.41	RI-1812

NMB P/N *		Reference Diameter				Ball		Basic Load Rating	
Shielded	Sealed	Open		Shield/Seal		Size D_W	No. Z	DYN C_r (1)	Static C_{or} (2)
		OR L_o	IR L_i	OR L_o	IR L_i				
		Inch	Inch	Inch	Inch	mm		N	N
	-	0.101	0.065	-	-	0.6350	6	106	28
RI-21/2ZZ	-	0.124	0.081	0.135	0.081	0.7938	6	158	44
RI-3ZZ	-	0.158	0.093	0.169	0.093	1.1906	5	264	71
RI-4ZZ	-	0.193	0.122	0.206	0.122	1.1906	6	330	99
RI-3332ZZ	-	0.163	0.118	0.169	0.118	0.7938	7	187	59
RI-5ZZ	-	0.271	0.173	0.283	0.173	1.5873	6	563	183
RI-418ZZ	-	0.217	0.161	0.230	0.161	1.0000	7	285	97
RI-518ZZ	-	0.271	0.173	0.283	0.173	1.5879	6	563	183
R-2ZZ	DD	0.301	0.200	0.322	0.200	1.5879	7	641	226
RI-618ZZ	-	0.271	0.173	0.283	0.173	1.5879	6	563	183
RI-5532ZZ	-	0.279	0.221	0.288	0.221	1.1906	7	391	142
RI-5632ZZ	-	0.279	0.221	0.288	0.221	1.1906	7	391	142
RI-6632ZZ	-	0.343	0.235	0.343	0.235	1.5879	8	712	271
R-3KK	DD	0.413	0.276	0.433	0.276	2.3813	7	1306	487
RI-614ZZ	-	0.340	0.285	0.350	0.285	1.0000	13	417	205
RI-814ZZ	-	0.432	0.330	0.455	0.330	1.5879	10	828	374
R-4KK	DD SS	0.513	0.323	0.513	0.323	2.3813	8	1470	599
RI-1214ZZ	-	0.598	0.386	0.641	0.340	3.5719	6	2411	912
RI-8516ZZ	-	0.450	0.362	0.463	0.362	1.5873	11	878	419
RI-1438KK	DD SS	0.709	0.488	0.752	0.488	3.9688	7	3297	1368
RI-1812KK	-	0.947	0.676	0.989	0.630	4.7625	8	5113	2387

Please consult with NMB Application Engineering for bearing selection.
*Column shows the availabilities and types.

(1) Based on JIS B 1518
(2) Based on JIS B 1519

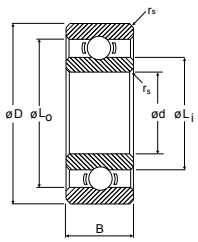

Radial Open Ball Bearings

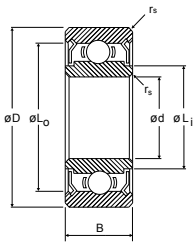

Radial Shielded Ball Bearings

Deep Groove Flanged Radial Ball Bearings

RIF-Series

Basic Dimension													
Bore d		OD D		Width B				Chamfer r_s min		Flange Diameter D_1		Flange Width C_1	
				Open		Shielded						Open	
Inch	mm	Inch	mm	Inch	mm	Inch	mm	Inch	mm	Inch	mm	Inch	mm
0.0469	1.191	0.1562	3.967	0.0625	1.588	0.0937	2.380	0.003	0.08	0.203	5.16	0.013	0.33
0.0550	1.397	0.1875	4.762	0.0781	1.984	0.1094	2.779	0.003	0.08	0.234	5.94	0.023	0.58
0.0781	1.984	0.2500	6.350	0.0937	2.380	0.1406	3.571	0.003	0.08	0.296	7.52	0.023	0.58
0.0937	2.380	0.1875	4.762	0.0625	1.588	0.0937	2.380	0.003	0.08	0.234	5.94	0.018	0.46
		0.3125	7.938	0.1094	2.779	0.1406	3.571	0.003	0.08	0.359	9.12	0.023	0.58
0.1250	3.175	0.2500	6.350	0.0937	2.380	0.1094	2.779	0.003	0.08	0.296	7.52	0.023	0.58
		0.3125	7.938	0.1094	2.779	0.1406	3.571	0.003	0.08	0.359	9.12	0.023	0.58
		0.3750	9.525	0.1562	3.967	0.1562	3.967	0.012	0.30	0.440	11.18	0.030	0.76
		0.3750	9.525	0.1094	2.779	0.1406	3.571	0.005	0.13	0.422	10.72	0.023	0.58
0.1562	3.967	0.3125	7.938	0.1094	2.779	0.1250	3.175	0.003	0.08	0.359	9.12	0.023	0.58
0.1875	4.762	0.3125	7.938	0.1094	2.779	0.1250	3.175	0.003	0.08	0.359	9.12	0.023	0.58
		0.3750	9.525	0.1250	3.175	0.1250	3.175	0.003	0.08	0.422	10.72	0.023	0.58
		0.5000	12.700	0.1562	3.967	0.1960	4.978	0.012	0.30	0.565	14.35	0.042	1.07
0.2500	6.350	0.3750	9.525	0.1250	3.175	0.1250	3.175	0.003	0.08	0.422	10.72	0.023	0.58
		0.5000	12.700	0.1250	3.175	0.1875	4.762	0.005	0.13	0.547	13.89	0.023	0.58
		0.6250	15.875	0.1960	4.978	0.1960	4.978	0.012	0.30	0.690	17.53	0.042	1.07
0.3125	7.938	0.5000	12.700	0.1562	3.967	0.1562	3.967	0.005	0.13	0.547	13.89	0.031	0.79
0.3750	9.525	0.8750	22.225	0.2188	5.558	0.2812	7.142	0.016	0.41	0.969	24.61	0.062	1.58

Basic Dimension		NMB Part Number *			Reference Diameter				Ball		Basic Load Rating	
Flange Width C_1					Open		Shield Seal		Size D_w	No. Z	DYN C_r (1)	Static C_{or} (2)
Shielded		Open	Shielded	Sealed	OR L_o	IR L_i	OR L_o	IR L_i				
Inch	mm				Inch	Inch	Inch	Inch	mm		N	N
0.031	0.79	RIF-21/2	RIF-21/2ZZ	-	0.124	0.081	0.135	0.081	0.7938	6	158	44
0.031	0.79	RIF-3	RIF-3ZZ	-	0.158	0.093	0.169	0.093	1.1906	5	264	71
0.031	0.79	RIF-4	RIF-4ZZ	-	0.193	0.122	0.206	0.122	1.1906	6	330	99
0.031	0.79	RIF-3332	RIF-3332ZZ	-	0.163	0.118	0.169	0.118	0.7938	7	187	59
0.031	0.79	RIF-5	RIF-5ZZ	-	0.271	0.173	0.283	0.173	1.5875	6	563	183
0.031	0.79	RIF-418	RIF-418ZZ	-	0.217	0.161	0.230	0.161	1.0000	7	285	97
0.031	0.79	RIF-518	RIF-518ZZ	-	0.271	0.173	0.283	0.173	1.5875	6	563	183
0.030	0.76	RF-2	RF-2ZZ	-	0.301	0.200	0.322	0.200	1.5875	7	641	226
0.031	0.79	RIF-618	RIF-618ZZ	-	0.271	0.173	0.283	0.173	1.5875	6	563	183
0.036	0.91	RIF-5532	RIF-5532ZZ	-	0.279	0.221	0.288	0.221	1.1906	7	391	142
0.036	0.91	RIF-5632	RIF-5632ZZ	-	0.279	0.221	0.288	0.221	1.1906	7	391	142
0.031	0.79	RIF-6632	RIF-6632ZZ	-	0.343	0.235	0.343	0.235	1.5875	8	712	271
0.042	1.07	RF-3	RF-3ZZ	-	0.413	0.276	0.435	0.276	2.3813	7	1306	487
0.036	0.91	RIF-614	RIF-614ZZ	-	0.340	0.285	0.350	0.285	1.0000	13	417	205
0.045	1.14	RIF-814	RIF-814ZZ	-	0.432	0.330	0.454	0.330	1.5875	10	828	374
0.042	1.07	RF-4	RF-4HH	DD	0.513	0.323	0.513	0.323	2.3813	8	1470	599
0.031	0.79	RIF-8516	RIF-8516ZZ	-	0.450	0.362	0.463	0.362	1.5875	11	878	419
0.062	1.58	RIF-1438	RIF-1438KK	DD	0.741	0.520	0.752	0.488	3.9688	7	3297	1368

Please consult with NMB Application Engineering for bearing selection.

*Column shows the availabilities and types.

(1) Based on JIS B 1518

(2) Based on JIS B 1519

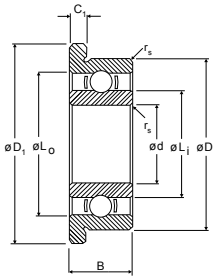

Radial Flanged Open Ball Bearings

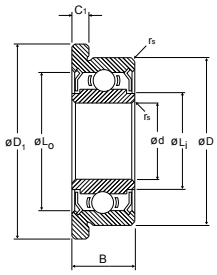

Radial Flanged Shielded Ball Bearings

Bearing Damage and Countermeasure

If equipment assembled with ball bearings isn't working correctly, or if the ball bearings themselves were damaged, the root causes of the failure can be determined by looking at the condition of the bearings. Better performance and longer life can be achieved by preventing the damage. Some common failure modes and preventive methods are described below.

Abnormal Conditions

Failure Modes		Major Causes	Countermeasure
Rotation	Unable to rotate or hard to rotate	Grease Type and Amount	Review grease selection and improve drive system (motor).
		Parts Rubbing	Review process and design.
		Grease Degradation (Particles)	Review lubricants. Review types and increase fill amount.
		Flaking (caused by Metal Fatigue)	Review load and rotational conditions. Increase bearing size.
Noise		Resonance of Components	Review dimensions (thickness) and materials of the components.
	Continuous Noise	Brinell Damage on the Raceways	Review handling and installation of bearings. Review transportation process of the applications. (Check for excessive load and shock loads)
		Contamination Dents on the Raceways	Select a sealed type bearing. Review installation environment.
	Intermittent Noise	Insufficient Preload	Review preload amount based on the load and rotation conditions.
		Contamination Dents	Select a sealed type bearing. Review installation environment.
		Damage on Balls	Review process and installation environment. (Contamination, and excessive loads).
Vibration		Excessive Internal Clearance	Decrease internal clearance.
		Improper Preload	Review preload amount based on the load and rotation conditions.
		Misalignment	Review process, dimensional tolerance, cleanliness of the components.
		Deformation of the Raceways	Review precision (roundness) of the shafts or housings. Review adhesive and its process.
Temperature Increase		Improper Grease Type and Amount	Review grease and fill amount.
		Excessive Load	Review load carrying capability and fits.
Grease Leak		Grease Type and Amount	Review grease and fill amount.
		Improper Selection of Shield and Seal	Review seal or shield type.
Plastic Damage (Cracking)		Chemical Attack	Review lubricant types. Reduce stress to the plastic or change the material type.
		Excessive Interference	Review fits.
		Weld Line	Review molding conditions and gate position.

Damage Types

Damage Conditions	Major Causes	Countermeasure
Flaking (by Metal Fatigue) 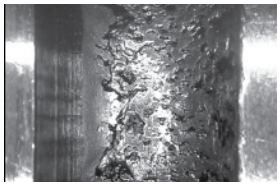	Excessive Load	Review bearing size and load conditions.
	Improper Installation	Review dimensions and precision of shafts and housings.
	Improper Lubrication	Review lubricant type and fill amount.
Dents (Brinelling) 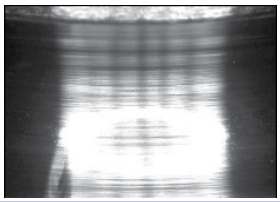	Excessive Load Applied During Assembly	Careful handling.
	Shock Loads Applied During Handling	Careful handling.
Rough Surface 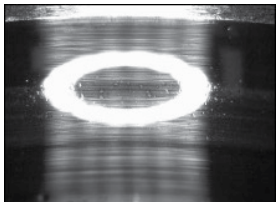	Contamination	Review process and installation environments.
	Improper Lubrication	Review lubricant type and fill amount.
Creeping 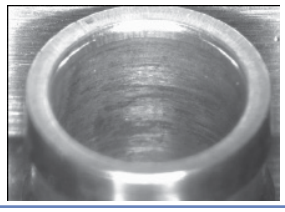	Insufficient Interference	Review fits and Interference.
Electric Corrosion (Arcing) 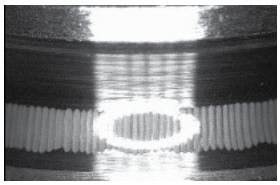	Surface Fluting	Caused by electricity passing through bearings. Insulate and install ground wire.

Tolerances

Miniature and Instrument Ball Bearings Inner Ring

Characteristic	ABEC 1	ABEC 3	ABEC 5	ABEC 7
Mean Bore Tolerance Limits	+.0000 -.0003	+.0000 -.0002	+.0000 -.0002	+.0000 -.0002
Radial Runout Width Variation	.0003 (1) —	.0002 (1) —	.00015 .00020	.0001 .0001
Bore Runout with Face	—	—	.00030	.0001
Race Runout with Face	—	—	.00030	.0001

(1) Add .0001 to the tolerance if bore size is over 10mm (.3937 inch).

Outer Ring

Characteristic	Configuration	Size Range	ABEC 1	ABEC 3	ABEC 5	ABEC 7
Mean O.D. Tolerance Limits	All	0-18mm (0-.709)	+.0000 -.0003	+.0000 -.0003	+.0000 -.0002	+.0000 -.0002
	All	over 18-30mm (.709-1.1811)	+.00000 -.00035	+.0000 -.0003	+.0000 -.0002	+.0000 -.0002
Radial Runout	All All	0-18mm over 18-30mm	.0006 .0006	.0004 .0004	.0002 .0002	.00015 .00015
Width Variation	All	0-30mm	—	—	.0002	.00010
O.D. Runout with Face	All	0-30mm	—	—	.0003	.00015
Race Runout with Face	Plain Plain Flanged	0-18mm over 18-30mm 0-30mm	— — —	— — —	.0003 .0003 .0003	.00020 .00020 .00030
Flange Width Tolerance Limits	— —	— —	— —	+.0000 -.0020	+.0000 -.0020	+.0000 -.0020
Flange Diameter Tolerance Limits	— —	— —	— —	+.0050 -.0020	+.0000 -.0010	+.0000 -.0010

Ring Width

Characteristic	ABEC 1	ABEC 3	ABEC 5	ABEC 7
Width Tolerance	+.000 -.005	+.000 -.005	+.000 -.001	+.000 -.001

Temperature Conversion Table

The numbers in the center column refer to the temperatures either in Celsius or Fahrenheit which need conversion to the other scale. When converting from Fahrenheit to Celsius, the equivalent temperature will be found to the left of the center column. If converting from Celsius to Fahrenheit the answer will be found to the right.

°C	°C/°F	°F	°C	°C/°F	°F	°C	°C/°F	°F	°C	°C/°F	°F
-79	-110	-166	37.7	100	212	204	400	752	371	700	1292
-73	-100	-148	43	110	230	210	410	770	376	710	1310
-68	-90	-130	49	120	248	215	420	788	382	720	1328
-62	-80	-112	54	130	266	221	430	806	387	730	1346
-57	-70	-94	60	140	284	226	440	824	393	740	1364
-51	-60	-76	65	150	302	232	450	842	565	1050	1922
-46	-50	-58	71	160	320	238	460	860	571	1060	1940
-40	-40	-40	76	170	338	243	470	878	576	1070	1958
-34	-30	-22	83	180	356	249	480	896	582	1080	1976
-29	-20	-4	88	190	374	254	490	914	587	1090	1994
-23	-10	14	93	200	392	260	500	932	593	1100	2012
-17.7	0	32	99	210	410	265	510	950	598	1110	2030
-17.2	1	33.8	104	220	428	271	520	968	604	1120	2048
-16.6	2	35.6	110	230	446	276	530	986	609	1130	2066
-16.1	3	37.4	115	240	464	282	540	1004	615	1140	2084
-15.5	4	39.2	121	250	482	288	550	1022	620	1150	2102
-15.0	5	41.0	127	260	500	293	560	1040	626	1160	2120
-14.4	6	42.8	132	270	518	299	570	1058	631	1170	2138
-13.9	7	44.6	138	280	536	304	580	1076	637	1180	2156
-13.3	8	46.4	143	290	554	310	590	1094	642	1190	2174
-12.7	9	48.2	149	300	572	315	600	1112	648	1200	2192
-12.2	10	50.0	154	310	590	321	610	1130	653	1210	2210
-6.6	20	68.0	160	320	608	326	620	1148	659	1220	2228
-1.1	30	86.0	165	330	626	332	630	1166	664	1230	2246
4.4	40	104.0	171	340	644	338	640	1184	670	1240	2264
9.9	50	122.0	177	350	662	343	650	1202	675	1250	2282
15.6	60	140.0	182	360	680	349	660	1220	681	1260	2300
21.0	70	158.0	188	370	698	354	670	1238	686	1270	2318
26.8	80	176.0	193	380	716	360	680	1256	692	1280	2336
32.1	90	194.0	199	390	734	365	690	1274	697	1290	2354

Metric Conversion Table

Fraction	Inch	MM	Fraction	Inch	MM	Fraction	Inch	MM
1/64	0.0156	0.3969		0.2883	7.3228	11/16	0.6875	17.4625
	0.0250	0.6350	19/64	0.2969	7.5406	45/64	0.7031	17.8594
1/32	0.0312	0.7937	5/16	0.3125	7.9375		0.7087	**18.0000**
	0.0394	**1.0000**		0.3150	**8.0000**	23/32	0.7187	18.2562
	0.0400	1.0160	21/64	0.3281	8.3344	47/64	0.7344	18.6532
3/64	0.0469	1.1906	11/32	0.3437	8.7312		0.7435	18.8849
	0.0472	1.2000		0.3543	**9.0000**		0.7480	**19.0000**
	0.0550	1.3970	23/64	0.3594	9.1281	**3/4**	0.7500	19.0500
	0.0591	**1.5000**	**3/8**	0.3750	9.5250	49/64	0.7656	19.4469
1/16	0.0625	1.5875	25/64	0.3906	9.9213		0.7717	19.6012
	0.0709	1.8000		0.3937	**10.0000**	25/32	0.7812	19.8433
5/64	0.0781	1.9844	13/32	0.4062	10.3187		0.7874	**20.0000**
	0.0787	**2.0000**		0.4100	10.4140	51/64	0.7969	20.2402
	0.0906	2.3012	27/64	0.4219	10.7156	13/16	0.8125	20.6375
3/32	0.0937	2.3812		0.4250	10.7950		0.8268	**21.0000**
	0.0984	**2.5000**		0.4331	**11.0000**	53/64	0.8281	21.0344
	0.1000	2.5400	7/16	0.4375	11.1125	27/32	0.8437	21.4312
	0.1024	2.6000	29/64	0.4531	11.5094	55/64	0.8594	21.8281
7/64	0.1094	2.7781		0.4600	11.6840		0.8661	**22.0000**
	0.1100	2.7940	15/32	0.4687	11.9062	**7/8**	0.8750	22.2250
	0.1102	2.8000		0.4724	**12.0000**	57/64	0.8906	22.6219
	0.1181	**3.0000**	31/64	0.4844	12.3031		0.9055	**23.0000**
1/8	0.1250	3.1750	**1/2**	0.5000	12.7000	29/32	0.9062	23.0187
	0.1256	3.1902		0.5118	**13.0000**	59/64	0.9219	23.4156
	0.1378	**3.5000**	33/64	0.5156	13.0968	15/16	0.9375	23.8125
9/64	0.1406	3.5719	17/32	0.5312	13.4937		0.9449	**24.0000**
5/32	0.1562	3.9687	35/64	0.5469	13.8906	61/64	0.9531	24.2094
	0.1575	**4.0000**		0.5512	**14.0000**	31/32	0.9687	24.6062
11/64	0.1719	4.3656	9/16	0.5625	14.2875		0.9843	**25.0000**
3/16	0.1875	4.7625	37/64	0.5781	14.6844	63/64	0.9844	25.0031
	0.1892	4.8057		0.5906	**15.0000**		**1.0000**	25.4000
	0.1969	**5.0000**	19/32	0.5937	15.0812		1.0236	**26.0000**
13/64	0.2031	5.1594	39/64	0.6094	15.4781		1.0415	26.4541
	0.2165	5.4991	**5/8**	0.6250	15.8750		1.0480	26.6192
7/32	0.2187	5.5562		0.6299	**16.0000**	1-1/16	1.0625	26.9875
15/64	0.2344	5.9531	41/64	0.6406	16.2719		1.0630	**27.0000**
	0.2362	**6.0000**		0.6500	16.5100		1.1025	**28.0000**
1/4	0.2500	6.3500	21/32	0.6562	16.6687	**1-1/8**	1.1250	28.5750
17/64	0.2656	6.7469		0.6620	16.8148		1.1417	**29.0000**
	0.2756	**7.0000**		0.6693	**17.0000**		1.1812	**30.0000**
9/32	0.2812	7.1437	43/64	0.6719	17.0656	1-3/16	1.1875	30.1625
						1-1/4	1.2500	31.7500
						1-1/2	1.5000	38.1000

Additional Products From NMB

Small Motors

NMB's small motor products include a line of hybrid and permanent magnet stepper motors, as well as NMB's brush and brushless DC motors. The brush DC motor line is ideal for applications that require small size and excellent power output. The brushless DC line is perfect for applications where the environment is sensitive to interference, battery powered equipment and clean room. Standard NMB hybrid and permanent magnet stepper motors are available, as well as many customizable features for your unique application.

For more information on our motor products, e-mail us at: *motors@nmbtc.com*

Cooling Fans

NMB offers a comprehensive line of more than 100 axial fans ranging in size from 25mm to 173mm. DC & AC Axial fans and blowers are designed to solve thermal management problems for our OEM customers. Producing over 100 million fans per year, NMB's focus is on total thermal management solutions. With three engineering centers for cooling fan design, our own vertical manufacturing process and a dedicated sales force we are committed to providing a quality solution for your cooling needs.

For more information on our cooling fans, e-mail us at: *fans@nmbtc.com*

Mechanical Bearing Assemblies

NMB's Miniature Precision Ball Bearings are the first component of a highly successful design of a mechanical bearing assembly. Machined components such as magnets, gears, molded and machine plastic parts, die cast parts and special materials are designed and manufactured to work precisely with NMB precision ball bearings. Complex mechanical bearing assemblies are custom made to your design specifications, and are ideal for medical, office automation, and currency machines, as well as factory and lab automation applications.

For more information on our mechanical assembly products, e-mail us at: *assemblies@nmbtc.com*

Fan Trays

NMB's extensive selection of AC and DC cooling fans, as well as the latest range of high efficiency motorized impellers are your turn-key solution for your custom fan tray designs. NMB's fan tray product offerings include single or multiple devices, redundant and single-point of failure proof design, intelligent and self regulated control functions, two way communication with system for remote access and wide voltage range design.

For more information on our custom Fan Trays e-mail us at: *info@nmbtc.com*

NMB™

NMB™

NMB Technologies Corporation

North America

Corporate Headquarters

9730 Independence Avenue

Chatsworth, CA 91311

P: 818-341-3355, F: 818-341-8207

E: info@nmbtc.com

www.nmbtc.com

Represented by:

International Sales Offices

Sao Paulo, Brazil

Shanghai, China

Bracknell, England

Baillet en France, France

Langen, Germany

Kowloon, Hong Kong

Haryana, India

Milan, Italy

Tokyo, Japan

Kuala Lumpur, Malaysia

Manila, Philippines

Singapore

Seoul, South Korea

Taipei, Taiwan

Bangkok, Thailand

Hanoi, Vietnam

4.2015